G & GV Series

Oil Free Series Air Compressor

Fixed Speed & Variable Speed Drive

37kW - 280kW / 50HP - 375HP



The Air of Trust

Proud to be part of samvardhana motherson

Anest Iwata Motherson

Anest Iwata Motherson (AIM) is a joint venture between Anest Iwata Corporation, Japan, and Motherson Group, India. Anest Iwata Corporation is one of the global leaders in Air Compressors and Vacuum Pumps with more than 9 decades of inspiring history of technological excellence.
Anest Iwata Motherson is committed to delighting its customers by ensuring the supply of the best quality products, supported with effective after-sales services at optimum value. The company has two state-of-the-art manufacturing facilities and a wide network of sales and service centers spread across India.

Anest Iwata Inspiring History



2022
"ARID"
Air Dryer Launched

2019
Rotary Vane
Vacuum Pump Launched

2018
Screw Air Compressor
Sales Started in India

2017
Electric Bus
Compressor Launched

2015
MEGASY Series
Medical Air & Vacuum Unit
Launched

Second Facility in Greater Noida



2013
Reciprocating Vacuum
Pump Launched in India

2012
Oil-Free Claw
Air Compressor Launched

2005
Braking Compressor for
Indian Railways Launched

2010
Second Facility Inaugurated
in Greater Noida (India)

2000
Anest Iwata Motherson
Established

2004
World's First Oil-Free
Booster Compressor
Launched



1991
World's First Oil-Free Scroll
Air Compressor Launched

1993
World's First Oil-Free Scroll
Vacuum Pump Launched



1928
First Reciprocating
Compressor
Manufactured

1984
World's First Oil-Free
Reciprocating Compressor with
"Seize Free Technology"
Launched

1977
Screw Air compressor
Launched

1926
Established
In Japan

| G/GV SERIES

G Series

WORKING POWER:37-280KW (50-375HP)

FREE AIR DELIVERY:2.5-47m^3/min (88.3-1660 cfm)

WORKING PRESSURE:7/8/10BAR (101.5/116/145 psig)



100% Oil Free Screw Compressor

Two Stage 100% Oil Free Screw Compressors.

1st Stage air-end is of E35 steel and 2nd stage is Stainless steel with an ultra coating at the rotor surface thus giving higher tolerance and better life of the air-end.

GHH Airend From Germany	*100% Oil Free*	*High Efficiency Cooling System*
Pre-Cooler to Help reduce Temp	*Class 0 Certificate from TUV*	

TYPICAL APPLICATIONS

Pharmaceutical



Electronic Industry



Oil and Gas Industry



Food and Beverage



Medical



Automobile



G/GV SERIES

EVEN MORE EFFICIENT

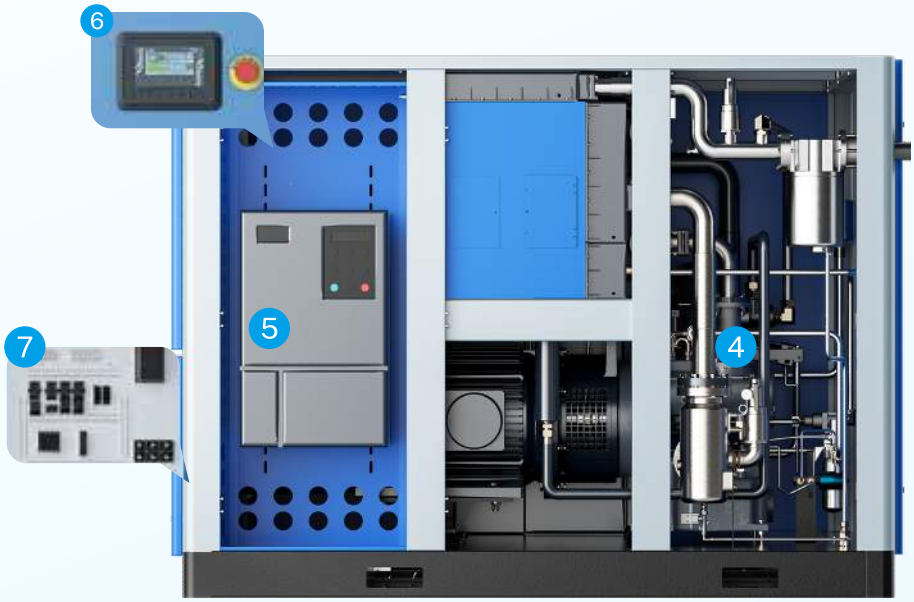

01-Total enclosed Motor

(PM motor is an option)

- **Standard TEFC motor**
- **PM motor is an option for VSD type**
- **IP54 (IP55 as an option) protection grade**

02-Oil Free Airend

- **Stainless Rotor for 2nd stage**
- **Double Protection (SS hermetic seal & labyrinth oil seal)**
- **SKF Bearings**
- **Class 0 100% Oil free reliable air**
- **Energy efficient operation**
- **Long maintenance intervals**

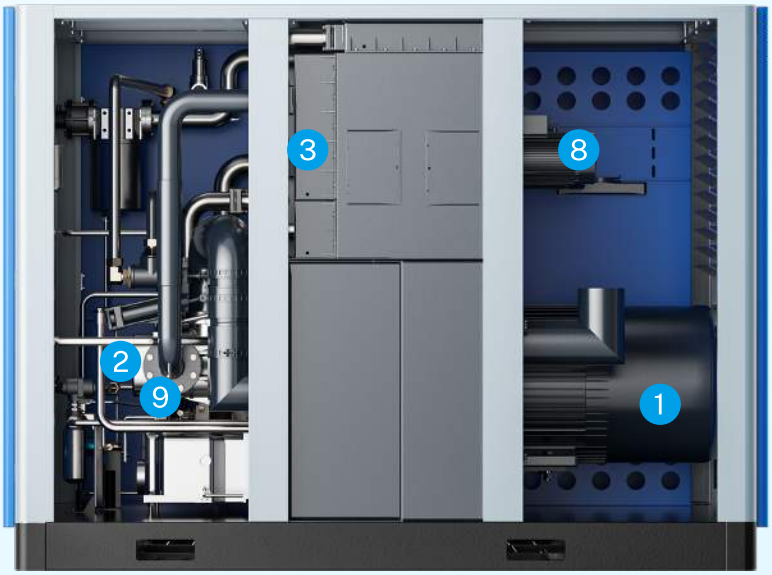

03-Inlet Filter

- **Nano Scale Heavy Duty**
- **Filtration accuracy up to 99.9%**
- **Captures dust particles below 0.3 microns**
- **Pressure drop indicator**
- **2,000 hours service intervals**

04-Inlet Valve

- Optimizes the inlet flow of the air end
- No blowdown losses
- Maintenance-free pipe design
- High vacuum degree:700mmhg
- Large suction area, special design for low-pressure application
- Prevents unloading and shutdown of oil injection
- Fluoro rubber for improved valve seal

05-Innovative flux vector inverter (optional)

- CE/UL certification
- Wide voltage design
- Meet EMC C3 and C2 requirements
- Built-in DC reactor
- Independent cooling air duct design
- Robust enclosure to trouble-free operation event in the harshest condition

06-Advance PLC Panel

- 7" full colour touch screen controller
- Real time operation/ maintenance/ alarm information
- Full graphic flow diagram
- Operation record/ chart display
- Multiple languages
- Weekly and daily scheduling, service history and planning
- On board RS485 interface, modbus RTU

07-Electrical control cabinet

- Siemens core electrical components are used to further enhance reliability

08-Centrifugal fan (up to 220HP)

- High reliability
- Low Noise Level
- High capacity for optimized cooling
- low power consumption

09-All-stainless steel internal pipe system

- All Steel internal pipe work and compression joints are used to prevent leakage and premature ageing often seen with flexible pipes
- Reduced friction losses

FEATURES & BENEFITES

01-OIL FREE SCREW AIREND

Original German GHH Rand Airend;
Stainless Steel Rotor;
Dual Sealed;
SKF Bearings;
Long Maintenance Intervals;
Energy Efficient Operation;
Clean 100% Oil free air to Class 0 .

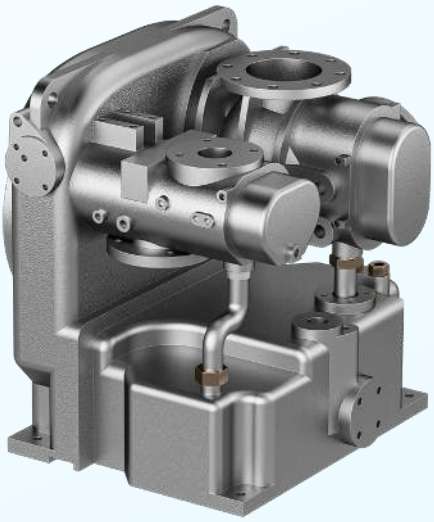

02-PATENTED VENTURI PIPE TO REDUCE NOISE LEVELS

Dry compression often leads to high noise levels particularly at high speed operation. Thanks to the patent- ed Venturi design, noise levels are significantly reduced.







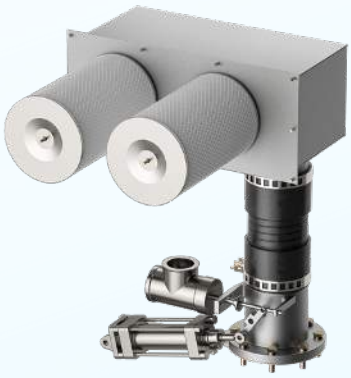

03-AIR INLET SYSTEM

The independent inlet silencer box ensures that the air filter inlet temperature matches the ambient temperature.

04-SILENT AIR FILTER SYSTEM

Pressure loss of air filter inlet structure <1000Pa. Reliable operation and easy maintenance.

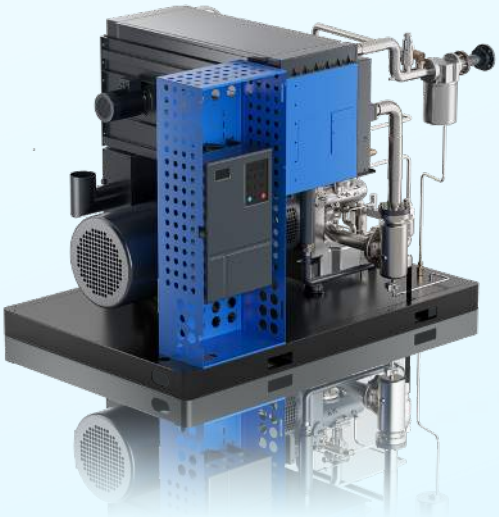



STATE-OF-THE-ART TOUCH CONTROLLER



SUPPORTS UP TO 16 MACHINES

- Improved user friendly design
- Parameters can be modified without stopping compressor
- 7 ” touch screen plc
- Modbus RTU protected
- RS485 interface
- Multiple warning and protection function
- Energy saving logic
- Overload/ Over current/ phase loss/unbalance protection
- Pre-alarm system to avoid sudden failure
- Multiple compressor sequencing capability
- Remote monitoring capability
- Programmable start stop schedules
- Power consumption data is storage inside PLC

Seven major characteristics

- On Board RS485 communication
- Intelligent PID flow regulation mode
- Accurate torque control
- Fast response speed for system pressure
- Fast acceleration and deceleration characteristics
- Closed loop dynamic control and high precision control
- Constant pressure control avoids over generating site air pressure



CLOUD SERVICE OPTION

New air solution program with advanced IOT technology

Anytime, Anywhere

Customers can monitor the live running conditions of AIM compressors anytime, anywhere and can be accessed through a Cloud service in real time. Moreover, alarm notifications will help prevent any unplanned down time.

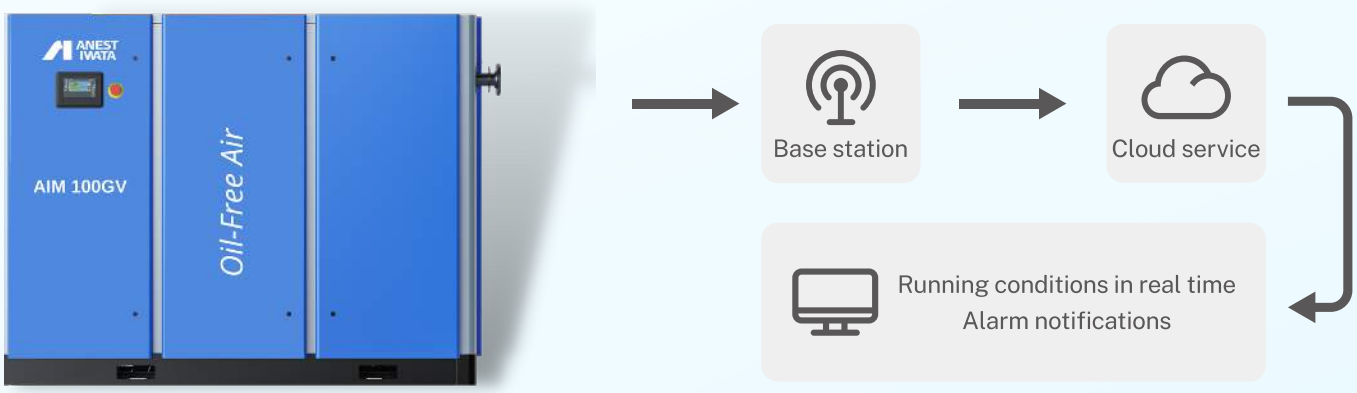

Reliable Security

VPN (Virtual private network) ensures the same reliable security level as the private network. User friendly Cloud service.

Practical use of cloud service

Easy maintenance

Maintenance will become easier thanks to remote monitoring system.

Stable-operation

Preventive maintenance according to alarm notifications increases reliability;

Live of energy usage data.

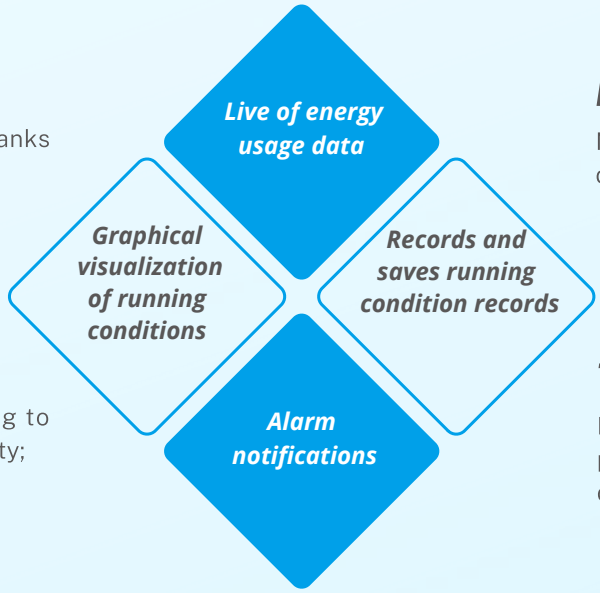

Energy saving

Monitoring the compressors actual conditions will help to improve energy use.

Trouble shooting

Remote monitoring prevents any unexpected maintenance issues and reduces downtime.

|TECHNICAL SPECIFICATIONS

Oil Free Screw - Fixed Speed - Air Cooled

Model	kW	HP	FAD (m3/min)	CFM	Pressure (Bar)	Dimensions (mm)	Outlet size	Weight (kg)
AIM 75G - 7	55	75	9.2	326	7	2380x1580x1880	DN50	2750
AIM 75G - 8			9	319	8			
AIM 75G - 10			7.7	273	10			
AIM 100G - 7	75	100	12.2	432	7	2380x1580x1880	DN50	2800
AIM 100G - 8			12	425	8			
AIM 100G - 10			10.7	379	10			
AIM 125G - 7	90	125	16	566	7	2880x1960x2110	DN65	3400
AIM 125G - 8			13.6	481	8			
AIM 125G - 10			13	460	10			
AIM 150G - 7	110	150	19.5	690	7	2880x1960x2110	DN65	3500
AIM 150G - 8			18.2	644	8			
AIM 150G - 10			16.5	584	10			
AIM 180G - 7	132	180	23	813	7	2880x1960x2110	DN65	3800
AIM 180G - 8			22.5	796	8			
AIM 180G - 10			19.5	690	10			
AIM 220G - 7	160	220	25.8	912	7	2880x1960x2110	DN65	4000
AIM 220G - 8			25.5	902	8			
AIM 220G - 10			22	778	10			

Oil Free Screw - VFD - Air Cooled

Model	kW	HP	FAD (m3/min)	CFM	Pressure (Bar)	Dimensions (mm)	Outlet size	Weight (kg)
AIM 50GV - 7	37	50	3.4-5.7	121-202	7	2468x1250x1980	DN50	2400
AIM 50GV - 8			3.3-5.5	117-195	8			
AIM 50GV - 10			2.5-4.6	89-163	10			
AIM 60GV - 7	45	60	4.1-6.8	145-241	7	2468x1250x1980	DN50	2500
AIM 60GV - 8			3.9-6.6	138-234	8			
AIM 60GV - 10			3.2-5.4	114-191	10			
AIM 75GV - 7	55	75	5.8-9.2	205-326	7	2380x1580x1880	DN50	2850
AIM 75GV - 8			5.3-9.0	188-319	8			
AIM 75GV - 10			4.6-7.7	163-273	10			
AIM 100GV - 7	75	100	7.5-12.2	266-432	7	2380x1580x1880	DN50	2900
AIM 100GV - 8			7.4-12.0	262-425	8			
AIM 100GV - 10			6.4-10.7	227-379	10			
AIM 125GV - 7	90	125	9.6-16	340-566	7	2880x1960x2110	DN65	3700
AIM 125GV - 8			8.2-13.6	290-481	8			
AIM 125GV - 10			7.8-13	276-460	10			
AIM 150GV - 7	110	150	11.7-19.5	414-690	7	2880x1960x2110	DN65	3800
AIM 150GV - 8			10.9-18.2	386-644	8			
AIM 150GV - 10			9.1-16.5	322-584	10			
AIM 180GV - 7	132	180	13.8-23	488-813	7	2880x1960x2110	DN65	4100
AIM 180GV - 8			13.2-22.5	467-796	8			
AIM 180GV - 10			11.7-19.5	414-690	10			
AIM 220GV - 7	160	220	15.5-25.8	548-912	7	2880x1960x2110	DN65	4300
AIM 220GV - 8			14.7-25.5	520-902	8			
AIM 220GV - 10			13.2-22	467-778	10			

Oil Free Screw - Fixed Speed - Water Cooled

Model	kW	HP	FAD (m3/min)	CFM	Pressure (Bar)	Dimensions (mm)	Outlet size	Weight (kg)
AIM 75WG - 7	55	75	9.2	326	7	2381x1581x1750	DN50	2280
AIM 75WG - 8			9	319	8			
AIM 75WG - 10			7.7	273	10			
AIM 100WG - 7	75	100	12.2	432	7	2381x1581x1750	DN50	2380
AIM 100WG - 8			12	425	8			
AIM 100WG - 10			10.7	379	10			
AIM 125WG - 7	90	125	16	566	7	2880x1880x1880	DN65	3300
AIM 125WG - 8			13.6	481	8			
AIM 125WG - 10			13	460	10			
AIM 150WG - 7	110	150	19.5	690	7	2880x1880x1880	DN65	3400
AIM 150WG - 8			18.2	644	8			
AIM 150WG - 10			16.5	584	10			
AIM 180WG - 7	132	180	23	813	7	2880x1880x1880	DN65	3800
AIM 180WG - 8			22.5	796	8			
AIM 180WG - 10			19.5	690	10			
AIM 220WG - 7	160	220	25.8	912	7	2880x1880x1880	DN65	4000
AIM 220WG - 8			25.5	902	8			
AIM 220WG - 10			22	778	10			
AIM 300WG - 7	220	300	37.8	1336	7	3350x2280x2080	DN100	5000
AIM 300WG - 8			37.5	1326	8			
AIM 300WG - 10			34	1202	10			
AIM 340WG - 7	250	340	45	1591	7	3350x2280x2080	DN100	5200
AIM 340WG - 8			42	1485	8			
AIM 340WG - 10			38	1343	10			
AIM 375WG - 7	280	375	47	1662	7	3350x2280x2080	DN100	5500
AIM 375WG - 8			46.5	1644	8			
AIM 375WG - 10			41	1449	10			

Oil Free Screw - VFD - Water Cooled

Model	kW	HP	FAD (m3/min)	CFM	Pressure (Bar)	Dimensions (mm)	Outlet size	Weight (kg)
AIM 75WGV - 7	55	75	5.8-9.2	205-326	7	2381x1581x1750	DN50	2380
AIM 75WGV - 8			5.3-9.0	188-319	8			
AIM 75WGV - 10			4.6-7.7	163-273	10			
AIM 100WGV - 7	75	100	7.5-12.2	266-432	7	2381x1581x1750	DN50	2480
AIM 100WGV - 8			7.4-12.0	262-425	8			
AIM 100WGV - 10			6.4-10.7	227-379	10			
AIM 125WGV - 7	90	125	9.6-16	340-566	7	2880x1880x1880	DN65	3500
AIM 125WGV - 8			8.2-13.6	290-481	8			
AIM 125WGV - 10			7.8-13.0	276-460	10			
AIM 150WGV - 7	110	150	11.7-19.5	414-690	7	2880x1880x1880	DN65	3600
AIM 150WGV - 8			10.9-18.2	386-644	8			
AIM 150WGV - 10			9.1-16.5	322-584	10			
AIM 180WGV - 7	132	180	13.8-23	488-813	7	2880x1880x1880	DN65	4100
AIM 180WGV - 8			13.2-22.5	467-796	8			
AIM 180WGV - 10			11.7-19.5	414-690	10			
AIM 220WGV - 7	160	220	15.5-25.8	548-912	7	2880x1880x1880	DN65	4300
AIM 220WGV - 8			14.7-25.5	520-902	8			
AIM 220WGV - 10			13.2-22	467-778	10			
AIM 300WGV - 7	220	300	23-37.8	813-1336	7	3350x2280x2080	DN100	5200
AIM 300WGV - 8			22-37.5	778-1326	8			
AIM 300WGV - 10			19-34	672-1202	10			
AIM 340WGV - 7	250	340	27-45	955-1591	7	3350x2280x2080	DN100	5500
AIM 340WGV - 8			25.8-42	912-1485	8			
AIM 340WGV - 10			22.8-38	806-1343	10			

- Standard Voltage is 400V/50Hz
- Free Air Delivery (m /min / cfm) is measured as per ISO 1217: 2009 - Annex C
- Mean noise level measured at a distance of 1 m according to ISO 2151: 2004 using ISO 9614/2 (sound intensity method); tolerance 3 dB(A).
- Vertical Air Tanks are available in various capacities
- Standalone Refrigerated Air Dryers, Heatless Air Dryers, Oil Removal Filters, and Auto Drain Valves are also available
- Specifications may change without prior notice



Engineering Capabilities & Customised Solutions.

We at Anest Iwata Motherson (AIM) are committed to delighting our customers. Our state-of-the-art Air Energy Core Technology Centre located in Yokohama, Japan works relentlessly on innovations and technologies that add value to our products and make us ready to serve our customer's future needs. It is our customer's trust in us that we have developed many "World's First" products.

Always Ahead with Anest Iwata!

Innovation driven World's 1st products



Oil Free Reciprocating Compressor



Oil Free Scroll Compressor



Oil Free Booster Compressor



Oil Free Scroll Vacuum Pump

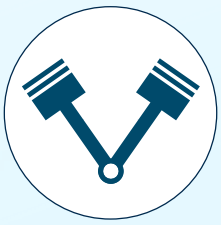

Reciprocating

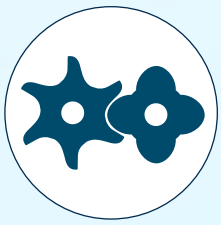

Screw



Scroll



Claw

Compressed Air Solutions in all Technologies

Active with Newest Technology

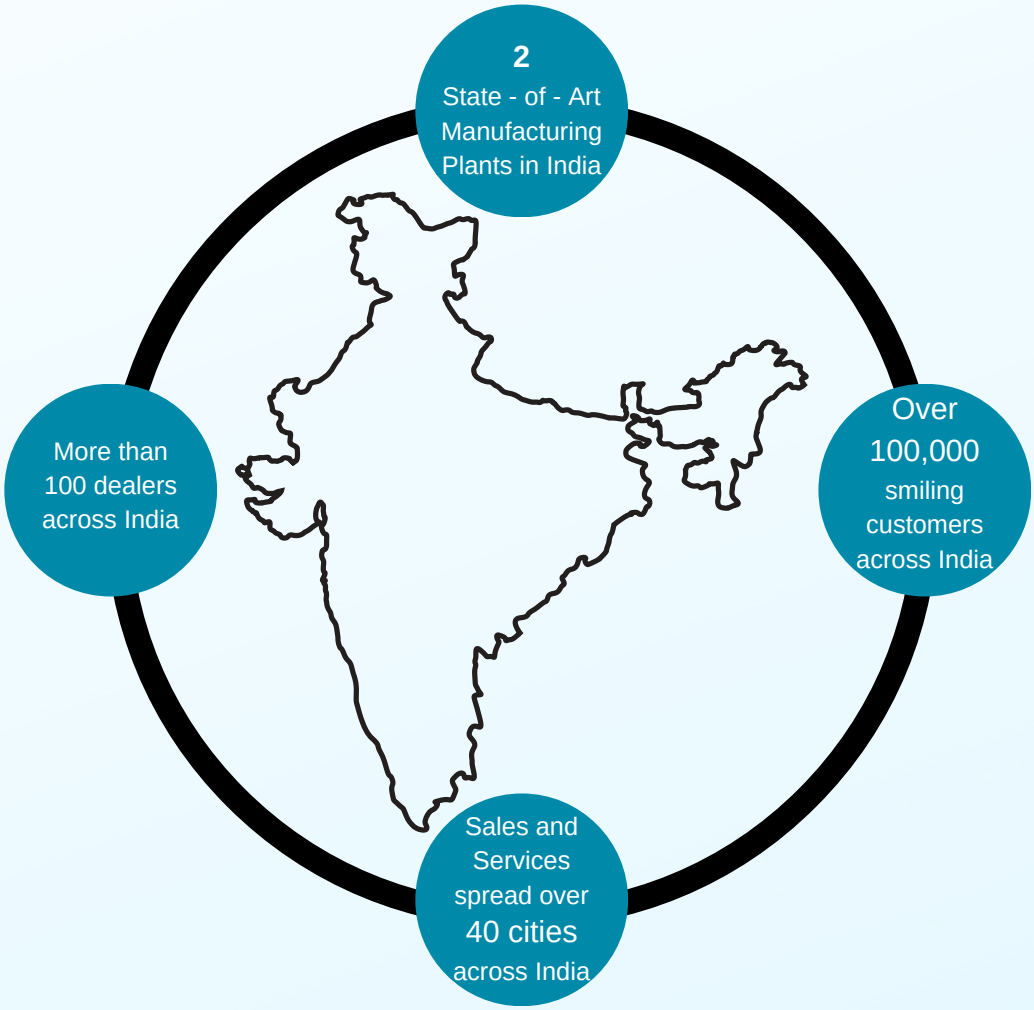

Anest Iwata Motherson Pvt. Ltd.
B-123 & 124, Sector-63, Noida - 201301,
Distt. Gautam Budh Nagar, UP, India.
Email: anestiwata@aim.motherson.com
Web: www.aimcompressors.com

For any details reach us at:
Head Office: +91-120-4600-500/510/512/517

North	**:**	**+91-9910394044**	**+91-9871362399**
East	**:**	**+91-9990023423**	**+91-9560806653**
West	**:**	**+91-9899553648**	**+91-9850993326**
South	**:**	**+91-9940654560**	**+91-9866000499**

AUTHORISED CHANNEL PARTNER

Proud to be part of samvardhana **motherson**