ANEST IWATA

MEGASY

medical gas systems



MEDICAL GAS OUTLET



ALARM SYSTEM



SHUT OFF VALVE



OILFREE RECIPRO COMPRESSOR UNIT

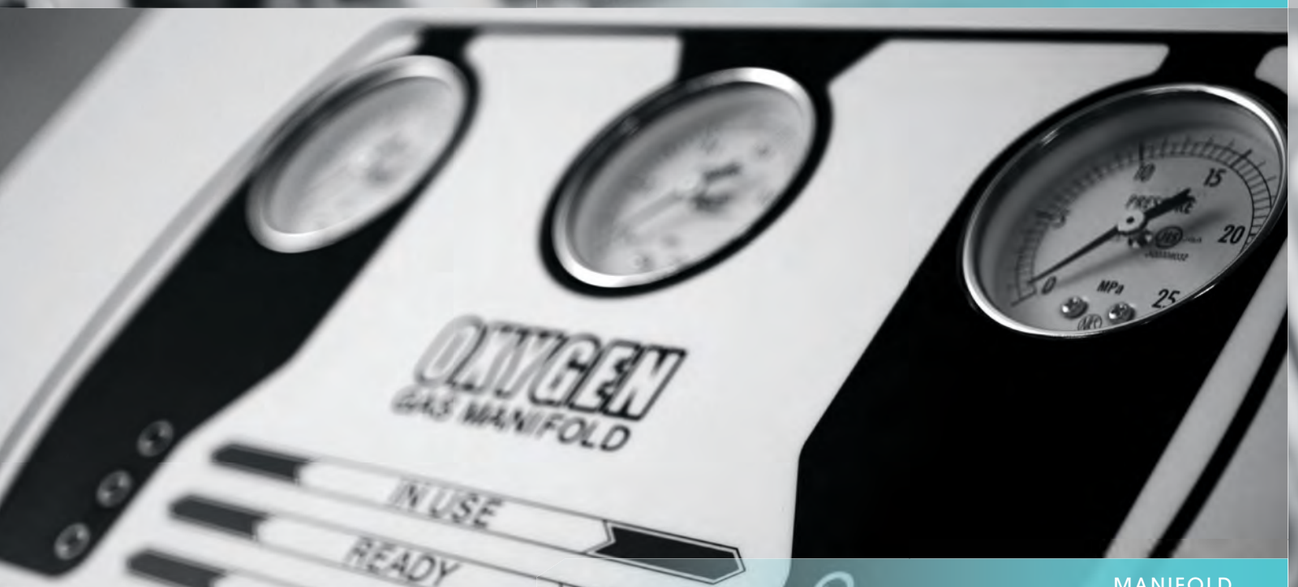

MANIFOLD



OILFREE SCROLL COMPRESSOR UNIT

MEGASY
medical gas systems

Cleanness

Promise you cleanest and trustred air with excellent technology.
leading company of oil free technology.

Quality

Mixed Japanese quality system and World standard system to provide
the most reliable product.

Localization

We are closer than you think.
Provide best product and solution to your area.

Solution

With engineers in each country, we can respond to
various requirements for customers.

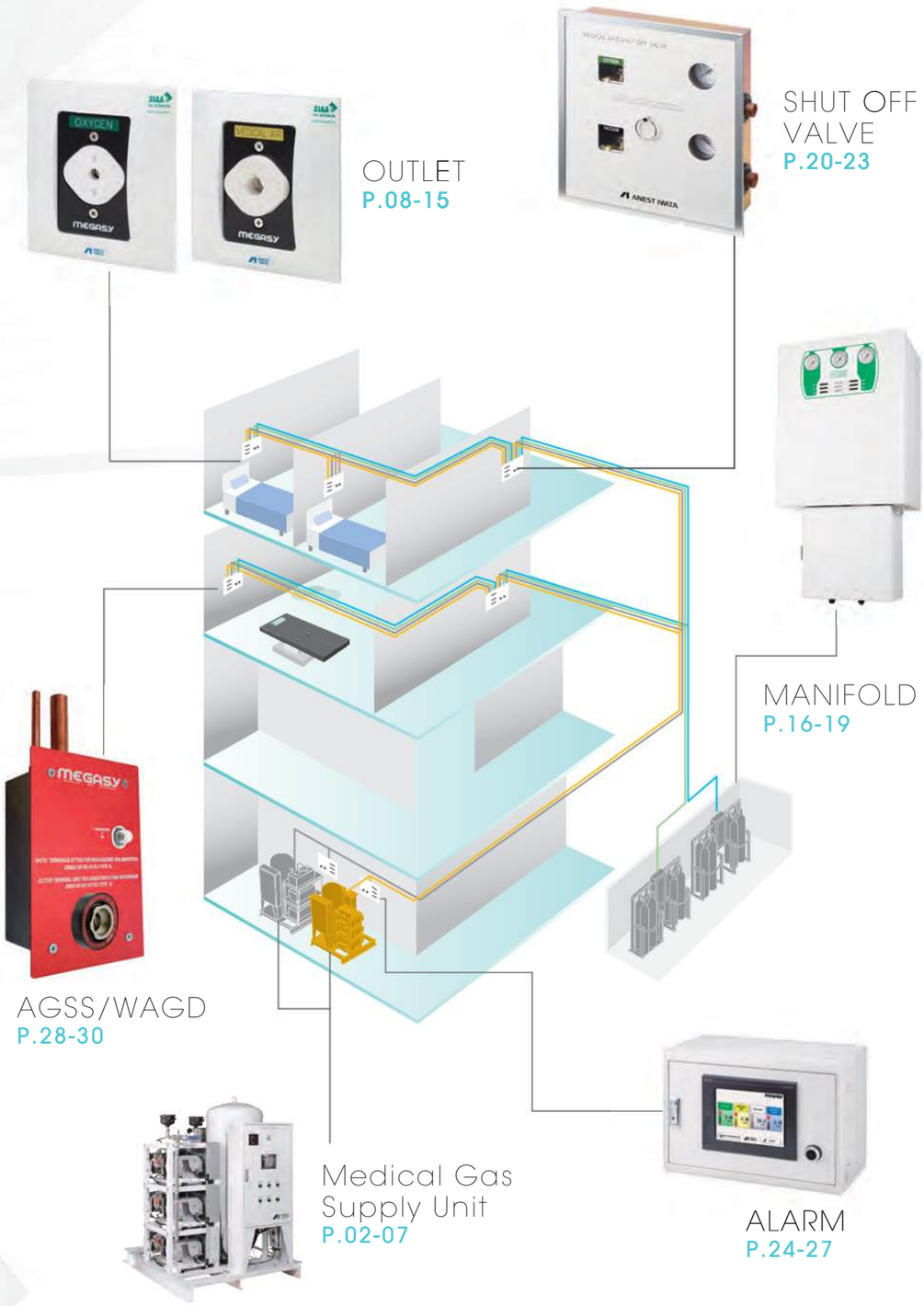

OUTLET
P.08-15

SHUT OFF
VALVE
P.20-23

MANIFOLD
P.16-19

AGSS/WAGD
P.28-30

Medical Gas
Supply Unit
P.02-07

ALARM
P.24-27

Medical Gas Supply Unit





MEGASY has 3 product lines of scroll compressor series , reciprocating compressor series and vacuum pump series.
It is safe due to backup capabilities of the device. It is easy to install because the piping and wiring between devices are not furnished.All-in-one design gives compact installation by one type with integrated air equipment. Also, it has backup functions as well.

Medical Gas Supply Unit
OUTLET
MANIFOLD
SHUT OFF VALVE
ALARM
AGSS/WAGD

Piping and wiring

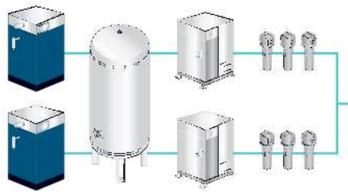

All-in-one



Easy Start

MEGASY is all-in-one system integrated with filter, dryer, air tank and compressor.
The control and power devices are already integrated. It is easy to install compressor because the piping and wiring between devices are not necessary.
Additionaly, anyone can easily wire the cable for alarms from dedicated controller.

Flow schematics

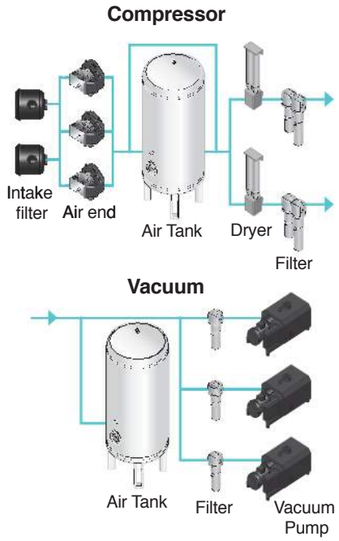

Safety

MEGASY Compressor is safety conscious and designed based on NFPA 99 or HTM 2022 or HTM 02-01.

1. Alarm system
To be able to take prompt action when system goes wrong, several warning alarms can be activated.
① Compressor : Air pressure warning,
Dew point warning,
Exhaust air temperature warning,
Maintenance time alarm
※CO alarm is optionalv
② Vacuum pump : Motor overload,
Exhaust air temperature warning,
Maintenance time alarm
2. Back-up system
Back-up system for all air line and control systems are installed to avoid shortage of air.

Regarding compressor of 10 HP



Compact design

Medico system consists of compressors or pumps, air receiver, filters and dryers (only compressor) which are efficiently assembled on the common frame and can be easily installed at minimized space.

＜Features＞
1. Less foot print than current products.
2. No vibration pads required because of low vibration.
3. Minimum installation cost since you do not need plumb pipings between equipments.

Oil Free Scroll Compressor Unit



web site

Cleanliness

Oil-free scroll compressor

This is mounted with oil-free scroll compressors.Oil - freeScroll Air compressor are able to supply a high quality clean air. Any oil does not come into a compressing chamber due to this structural feature.

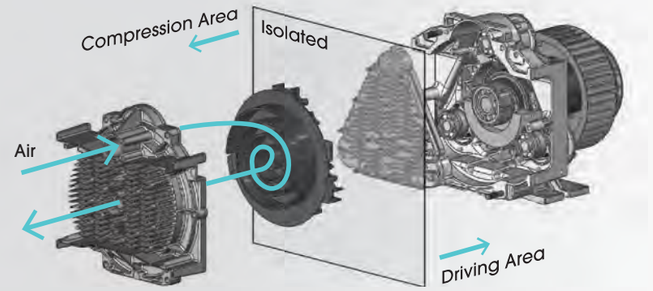

CLASS ZERO OILFREE

TÜV(Independent third party test house) has just certified that air quality from oilfree claw compressors and oilfree scroll compressors are in conformity with" Class0 (ISO8573-1:2010(-:-:0)) ".

ANEST IWATA is able to supply high quality air to the application where oil contents are to be total removed, such as hospitalsly.

NFPA

Model		Output	F.A.D @0.35MPa [L/min]	Pressure [MPa]	Power [V]	Air Tank [L]	Dryer type	Dew point
Tank mount	SLMT0502	Main 5HP + Back up 5HP×1	450	0.65 ～ 0.8	Three Phase 380V and others	350	Desiccant	Below -17°C
Frame type	SLMF1003	Main 10HP(5HP×2) + Back up 5HP×1	900			400		
	SLMF1504	Main 15HP(5HP×3) + Back up 5HP×1	1350			600		
	SLMF2005	Main 20HP(5HP×4) + Back up 5HP×1	1800			600		
	SLMF2506	Main 25HP(5HP×5) + Back up 5HP×1	2250			600		
	SLMF3007	Main 30HP(5HP×6) + Back up 5HP×1	2700			800		
	SLMF3508	Main 35HP(5HP×7) + Back up 5HP×1	3150			800		

HTM

Model		Output	F.A.D @4bar [L/min]	F.A.D @7bar [L/min]	Pressure [MPa]	Power [V]	Air Tank [L]	Dryer type	Dew point
System	SLMS2004	Main 20HP(5HP×4) + Back up 20HP(5HP×4)	1792	1736	0.6 ～ 0.8	Three Phase 380V and others	1000	Desiccant	Below -46°C
	SLMS3004	Main 30HP(5HP×6) + Back up 30HP(5HP×6)	2688	2604			2000		
	SLMS4004	Main 40HP(5HP×8) + Back up 40HP(5HP×8)	3584	3472			2000		
	SLMS6004	Main 60HP(5HP×12) + Back up 60HP(5HP×12)	5376	5208			4000		
	SLMS8004	Main 80HP(5HP×16) + Back up 80HP(5HP×16)	7168	6944			4000		

※Gas supply station is designed as per llocal demand. Please contact our brunches in your country

Oil Free Reciprocating Compressor Unit



web site

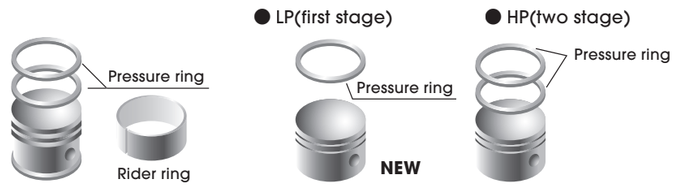

The composite resin piston

The composite resin piston is made from a heat resistant and thermosetting resin. It has excellent anti-wear characteristics and can endure continuous use under high temperatures. It eliminated the need for a rider ring, which is essential to conventional OIL FREE air compressors. This means you are free from seizure or galling, often found in the rider ring mechanism. The compression ring is made from Teflon resin which has high heat and anti-wear resistance properties.

NFPA

Model		Output	F.A.D @0.35MPa [L/min]	Pressure [MPa]	Power [V]	Air Tank [L]	Dryer type	Dew point
Frame type	RPM0202	Main 2HP(2HP×1) + Back up 2HP×1	197	0.8 ～ 1	Three Phase 380V and others	200	Desiccant	Below -17°C
	RPM0302	Main 3HP(3HP×1) + Back up 3HP×1	300			200		
	RPM0502	Main 5HP(5HP×1) + Back up 5HP×1	477			200		
	RPM0802	Main 8HP(8HP×1) + Back up 8HP×1	575			400		
	RPM1002	Main 10HP(10HP×1) + Back up 10HP×1	807			400		
	RPM1502	Main 15HP(15HP×1) + Back up 15HP×1	1224			600		
	RPM2003	Main 20HP(10HP×2) + Back up 10HP×1	1614			600		
	RPM3003	Main 30HP(15HP×2) + Back up 15HP×1	2448			1000		
	RPM4504	Main 45HP(15HP×3) + Back up 15HP×1	3672			1000		

HTM

Model		Output	F.A.D @4bar [L/min]	F.A.D @7bar [L/min]	Pressure [MPa]	Power [V]	Air Tank [L]	Dryer type	Dew point
Frame type	RPM0202	Main 2HP(2HP×1) + Back up 2HP×1	194	178	0.8 ～ 1	Three Phase 380V and others	120	Desiccant	Below -46°C
	RPM0302	Main 3HP(3HP×1) + Back up 3HP×1	295	263			240		
	RPM0502	Main 5HP(5HP×1) + Back up 5HP×1	468	412			240		
	RPM0752	Main 7.5HP(7.5HP×1) + Back up 7.5HP×1	574	565			300		
	RPM1002	Main 10HP(10HP×1) + Back up 10HP×1	806	799			500		
	RPM1502	Main 15HP(15HP×1) + Back up 15HP×1	1221	1208			800		
	RPM2004	Main 20HP(10HP×2) + Back up 10HP×2	1612	1598			1000		
	RPM3004	Main 30HP(15HP×2) + Back up 15HP×2	2442	2416			1500		
	RPM4506	Main 45HP(15HP×3) + Back up 15HP×3	3663	3624			2000		

※Gas supply station is designed as per local demand. Please contact our brunches in your country

Dry Claw Vacuum Unit



web site

NFPA

Model	Output	NFPA system capacity [L/min]		Tank [L]
		50Hz @19"Hg	60Hz @19"Hg	
VDCM0402-40	Main 4HP(4HP×1)+Back up 4HP×1	622	733	400
VDCM0402-60				600
VDCM0402-80				800
VDCM0552-40	Main 5.5HP(5.5HP×1)+Back up 5.5HP×1	900	1078	400
VDCM0552-60				600
VDCM0552-80				800
VDCM0752-40	Main 7.5HP(7.5HP×1)+Back up 7.5HP×1	1394	1667	400
VDCM0752-60				600
VDCM0752-80				800
VDCM1002-60	Main 10HP(10HP×1)+Back up 10HP×1	1900	2289	600
VDCM1002-80				800
VDCM1002-100				1000
VDCM1503-60	Main 15HP(7.5HP×2)+Back up 7.5HP×1	2789	3333	600
VDCM1503-80				800
VDCM1503-100				1000
VDCM2003-60	Main 20HP(10HP×2)+Back up 10HP×1	3800	4578	600
VDCM2003-80				800
VDCM2003-100				1000
VDCM3004-80	Main 30HP(10HP×3)+Back up 10HP×1	5700	6867	800
VDCM3004-100				1000
VDCM3004-200				2000
VDCM5006-80	Main 50HP(10HP×5)+Back up 10HP×1	9500	11444	800
VDCM5006-100				1000
VDCM5006-200				2000
VDCM7008-80	Main 70HP(10HP×7)+Back up 10HP×1	13300	16022	800
VDCM7008-100				1000
VDCM7008-200				2000

HTM

Model	Output	HTM system capacity [L/min]		Tank [L]
		50Hz @-475mmHg	60Hz @-475mmHg	
VDCM0402	Main 4HP(4HP×1)+Back up 4HP×1	700	825	1000
VDCM0552	Main 5.5HP(5.5HP×1)+Back up 5.5HP×1	1013	1213	1500
VDCM0752	Main 7.5HP(7.5HP×1)+Back up 7.5HP×1	1569	1875	2000
VDCM1002	Main 10HP(10HP×1)+Back up 10HP×1	2138	2575	3000
VDCM1504	Main 15HP(7.5HP×2)+Back up 15HP(7.5HP×2)	3138	3750	4000(2000×2)
VDCM2004	Main 20HP(10HP×2)+Back up 20HP(10HP×2)	4275	5150	6000(3000×2)
VDCM3006	Main 30HP(10HP×3)+Back up 30HP(30HP×3)	6413	7725	8000(2000×4)
VDCM4008	Main 40HP(10HP×4)+Back up 40HP(10HP×4)	8550	10300	12000(3000×4)

※Gas supply station is designed as per local demand. Please contact our brunches in your country.

Oil Vane Vacuum Unit



web site

NFPA

Model	Output	NFPA system capacity [L/min]		Tank [L]
		50Hz @19"Hg	60Hz @19"Hg	
VOVM0102	Main 1HP(1HP×1)+Back up 1HP×1	156	183	400
VOVM0152	Main 1.5HP(1.5HP×1)+Back up 1.5HP×1	244	294	400
VOVM0202-40	Main 2HP(2HP×1)+Back up 2HP×1	378	453	400
VOVM0202-60				600
VOVM0202-80				800
VOVM0302-40	Main 3HP(3HP×1)+Back up 3HP×1	556	667	400
VOVM0302-60				600
VOVM0302-80				800
VOVM0402-40	Main 4HP(4HP×1)+Back up 4HP×1	733	867	400
VOVM0402-60				600
VOVM0402-80				800
VOVM0552-40	Main 5.5HP(5.5HP×1)+Back up 5.5HP×1	1111	1333	400
VOVM0552-60				600
VOVM0552-80				800
VOVM0752-60	Main 7.5HP(7.5HP×1)+Back up 7.5HP×1	1667	2000	600
VOVM0752-80				800
VOVM0752-100				1000
VOVM1002-60	Main 10HP(10HP×1)+Back up 10HP×1	2000	2400	600
VOVM1002-80				800
VOVM1002-100				1000
VOVM1202-60	Main 12HP(12HP×1)+Back up 12HP×1	2367	2838	600
VOVM1202-80				800
VOVM1202-100				1000
VOVM1502-60	Main 15HP(15HP×1)+Back up 15HP×1	2850	3422	600
VOVM1502-80				800
VOVM1502-100				1000
VOVM1752-60	Main 18.5HP(17.5HP×1)+Back up 17.5HP×1	3528	4272	600
VOVM1752-80				800
VOVM1752-100				1000
VOVM2403-80	Main 24HP(12HP×2)+Back up 12HP×1	4733	5678	800
VOVM2403-100				1000
VOVM2403-200				2000
VOVM3003-80	Main 30HP(15HP×2)+Back up 15HP×1	5700	6844	800
VOVM3003-100				1000
VOVM3003-200				2000
VOVM3503-80	Main 35HP(17.5HP×2)+Back up 17.5HP×1	7056	8544	800
VOVM3503-100				1000
VOVM3503-200				2000

HTM

Model	Output	HTM system capacity [L/min]		Tank [L]
		50Hz @-475mmHg	60Hz @-475mmHg	
VOVM0102	Main 1HP(1HP×1)+Back up 1HP×1	175	206	300
VOVM0152	Main 1.5HP(1.5HP×1)+Back up 1.5HP×1	275	331	400
VOVM0202	Main 2HP(2HP×1)+Back up 2HP×1	425	510	600
VOVM0302	Main 3HP(3HP×1)+Back up 3HP×1	625	750	800
VOVM0402	Main 4HP(4HP×1)+Back up 4HP×1	825	975	1000
VOVM0552	Main 5.5HP(5.5HP×1)+Back up 5.5HP×1	1250	1500	2000
VOVM0752	Main 7.5HP(7.5HP×1)+Back up 7.5HP×1	1875	2250	3000
VOVM1002	Main 10HP(10HP×1)+Back up 10HP×1	2250	2700	3000
VOVM1202	Main 12HP(12HP×1)+Back up 12HP×1	2662	3194	4000(2000×2)
VOVM1502	Main 15HP(15HP×1)+Back up 15HP×1	3206	3850	4000(2000×2)
VOVM1752	Main 18HP(17.5HP×1)+Back up 17.5HP×1	3969	4806	6000(3000×2)
VOVM2404	Main 24HP(12HP×2)+Back up 24HP(12HP×2)	5325	6387	8000(2000×4)
VOVM3004	Main 30HP(15HP×2)+Back up 30HP(15HP×2)	6413	7700	8000(2000×4)
VOVM3504	Main 35HP(17.5HP×2)+Back up 35HP(17.5HP×2)	7938	9613	10000(2000×5)

※Gas supply station is designed as per local demand. Please contact our brunches in your country.

OUTLET



web site

Line UP

Line up of NFPA type, HTM type and JIS type.
NFPA type: Conforming to NFPA 99 (2012)
HTM type
BS: Certified CE 5682:1998
DIN: Certified CE DIN 13260-2

Safety

Outlets are designed with different shapes depending on the gas to avoid misconnection.
Since outlets are frequently touched, sanitary conditions are maintained by SIAA (ISO22196) antimicrobial coating (NFPA specification only).

NFPA-Chemetron-



Model code

MD-O-CM-□-□

Installation
W:Wall
C:Console

Gas
O:Oxygen
A:Medical Air
V:Vacuum
T:Nitrous Oxide

Wall type

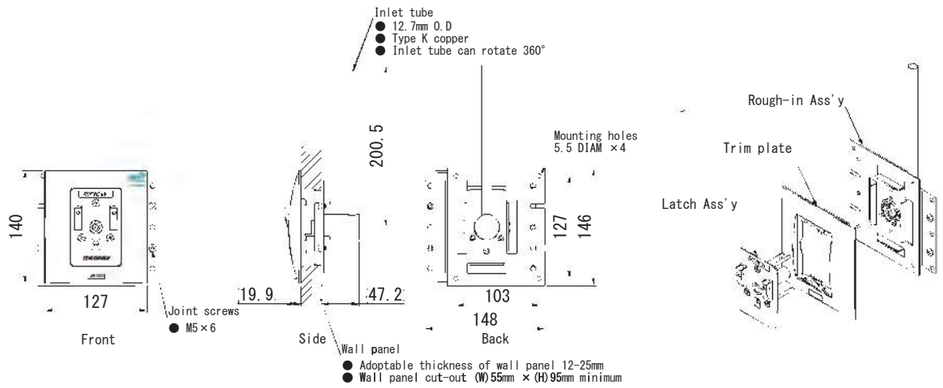

Console type

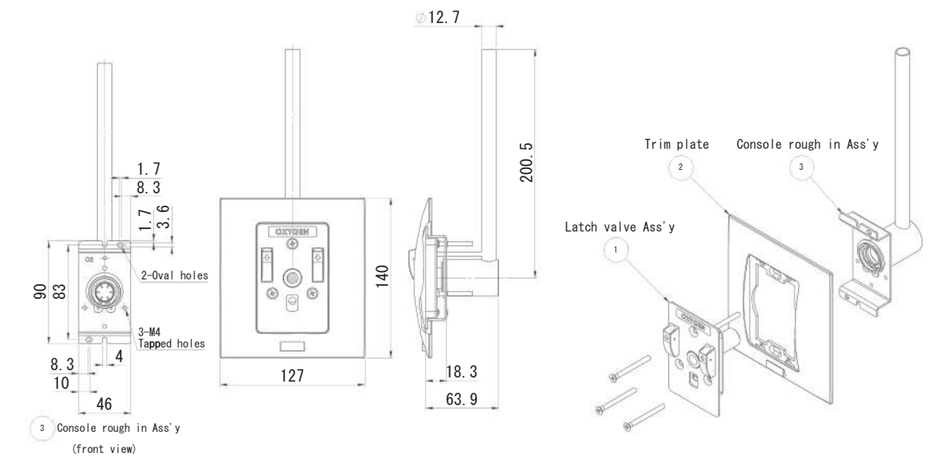

NFPA-Ohmeda-



Model code

MD-O-OH-□-□

Installation
W:Wall
C:Console

Gas
O:Oxygen
A:Medical Air
V:Vacuum
T:Nitrous Oxide

Wall type

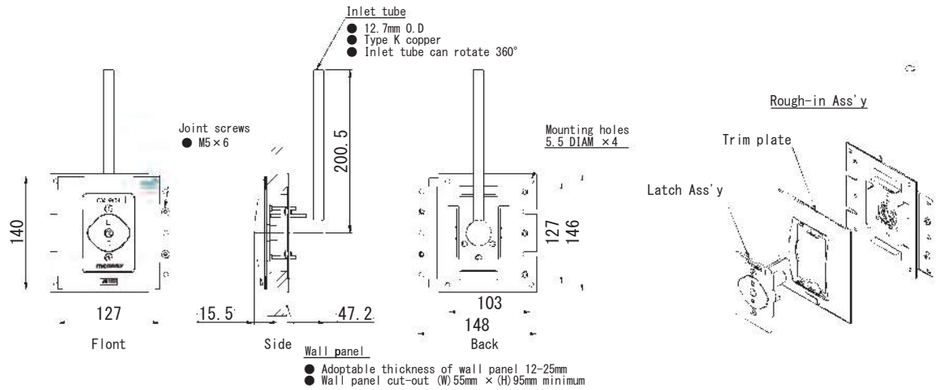

Console type

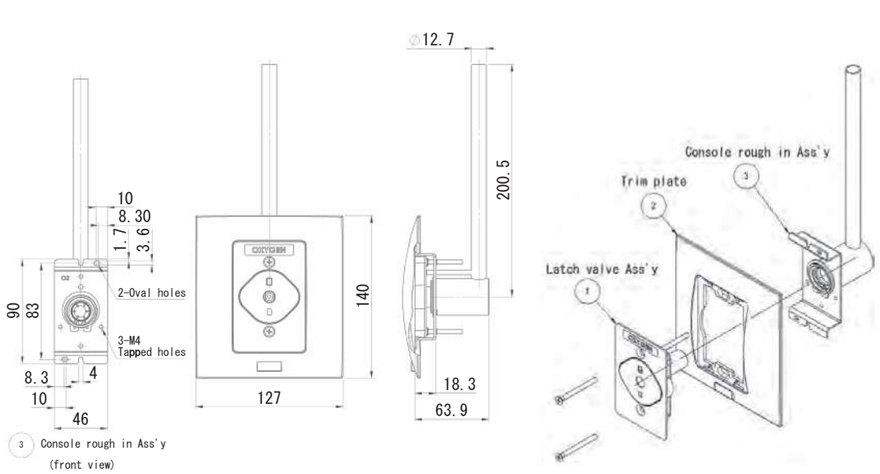

NFPA-Puritan-Bennet-



Model code

MD-O-PB-□-□

Installation
W:Wall
C:Console

Gas
O:Oxygen
A:Medical Air
V:Vacuum
T:Nitrous Oxide

Wall type

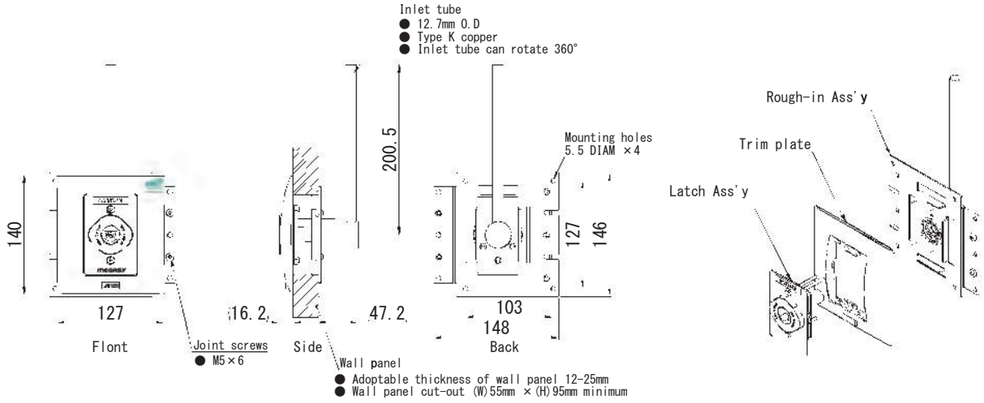

Console type

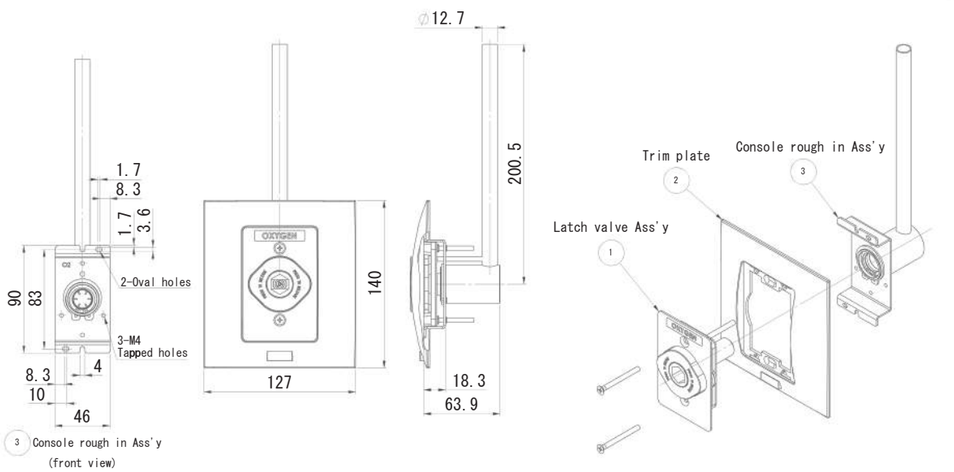

NFPA-DISS-

Model code

MD-O-DI-□-□

Installation
X:Box
E:Without box

Gas
O:Oxygen
A:Medical Air
V:Vacuum
T:Nitrous Oxide
S:Surgical Air



Box type

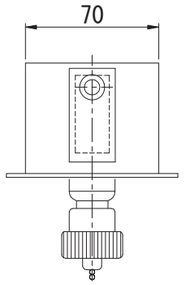

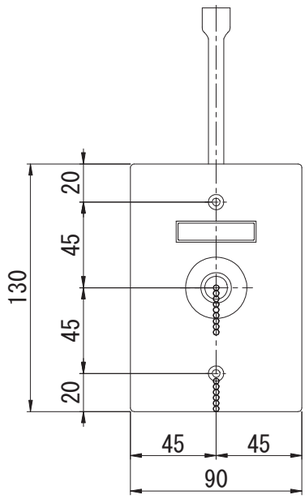

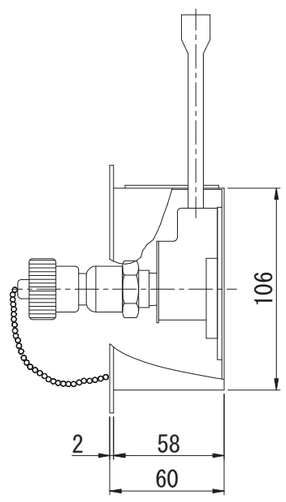

HTM-DIN-

Model code

MD-O-DN-□-□-□-□

Gas
O:Oxygen
A:Medical Air
S:Surgical Air
V:Vacuum
T:Nitrous Oxide
N:Nitrogen
B:OXYGEN/NITROUS OXIDE

Type
X : with Box
B:Brass (without box)
Z:Brass /Zamac(without box)

Pipe size
8:8mm
1:10mm
2:12mm

Socket material
M:Metal
B:Plastic and metal
P:Plastic



Box Type

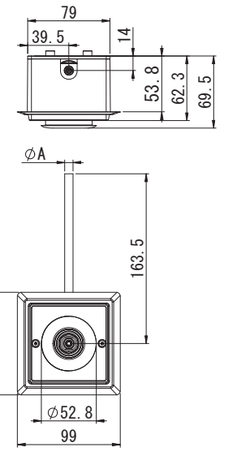

Model	ϕA
MD-O-DN-X-8-□-□	8mm
MD-O-DN-X-1-□-□	10mm
MD-O-DN-X-2-□-□	12mm

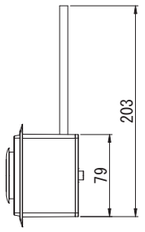

Brass type(without box)

Model	ϕA
MD-O-DN-B-8-□-□	8
MD-O-DN-B-1-□-□	10
MD-O-DN-B-2-□-□	12

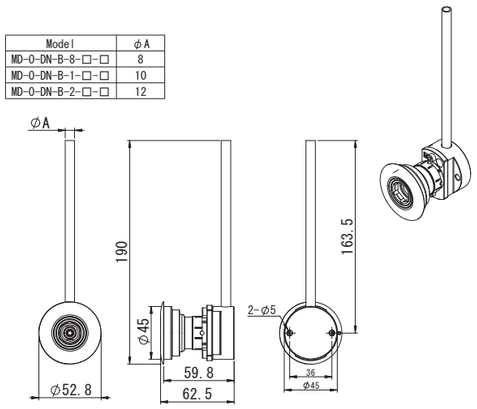

Brass/Zamac (without box)

Model	ϕA
MD-O-DN-Z-8-□-□	8
MD-O-DN-Z-1-□-□	10
MD-O-DN-Z-2-□-□	12

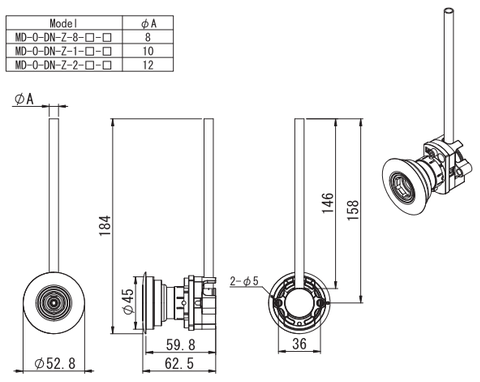

HTM-BS-

Model code

MD-O-BS-□-□-□-□

Gas
O:Oxygen
A:Medical Air
S:Surgical Air
V:Vacuum
T:Nitrous Oxide
B:OXYGEN/NITROUS OXIDE

Type
X : with Box
B:Brass (without box)
Z:Brass /Zamac(without box)

Pipe size
8:8mm
1:10mm
2:12mm

Socket material
M:Metal
B:Plastic and metal
P:Plastic



Box Type

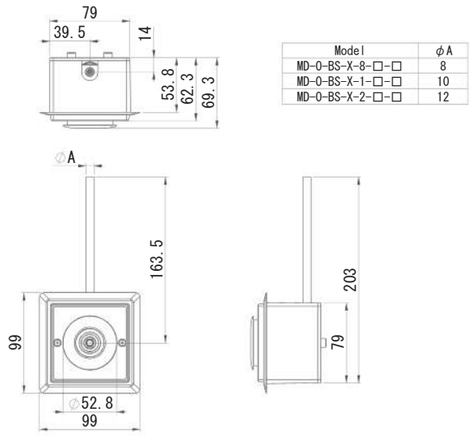

Model	ϕA
MD-O-BS-X-8-□-□	8
MD-O-BS-X-1-□-□	10
MD-O-BS-X-2-□-□	12

Brass type(without box)

Model	ϕA
MD-O-BS-B-8-□-□	8
MD-O-BS-B-1-□-□	10
MD-O-BS-B-2-□-□	12

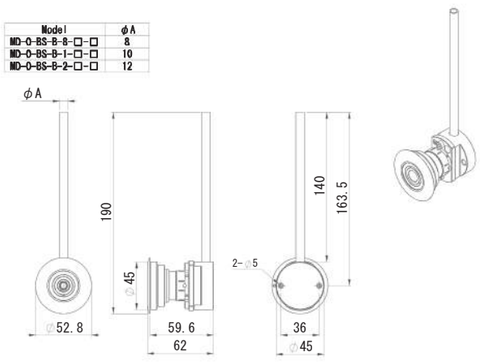

Brass/Zamac (without box)

Model	ϕA
MD-O-BS-Z-8-□-□	8
MD-O-BS-Z-1-□-□	10
MD-O-BS-Z-2-□-□	12

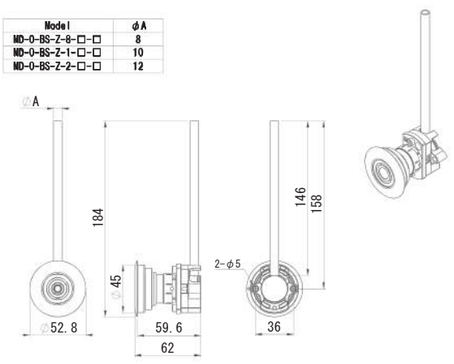

JIS

Model code

MD-O-JS-□-□-□

X : with Box
E : without Box

Type
T : Twist
P : Push

O:Oxygen
A:Medical Air
V:Vacuum
T:Nitrous Oxide



Box type(Twist type)

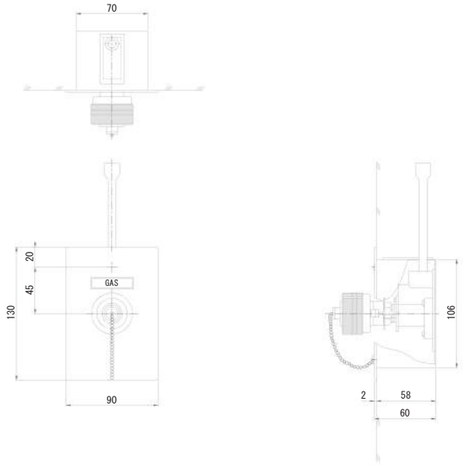

Box type(Push type)

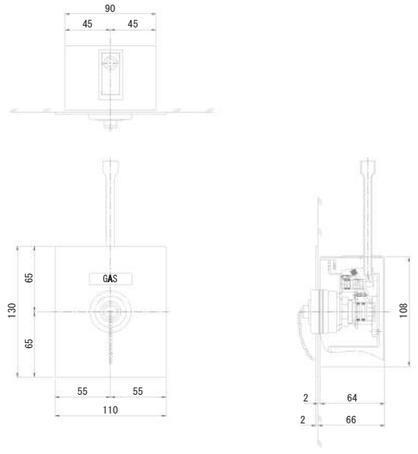

MANIFOLD



web site

Line UP

NFPA type and HTM type

NFPA: Full automatic control system and semiautomatic control system

Full automatic type has all functions completely controlled by PLC.

Semi Automatic system is controlled using a simple lever to switch the cylinder.

(Both systems switch cylinders automatically when one is empty.)

HTM: Eco type and Standard type.

Safety

If the gas of the servicing bank becomes empty, the gas automatically starts to flow from the stand-by bank. Gas pressure information and emergency status can be output to the alarm system.

NFPA



Model code

MD-M-N-□-□-□□-□

F : Full auto S : Semi-auto	S : 500L/min H : 1000L/min	Number of sylinder 2 ～ 40	O:Oxygen T:Nitrous Oxide N:Nitrogen C:Carbon Dioxide

NFPA full automatic

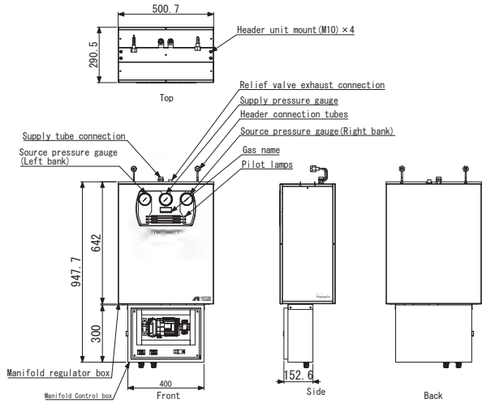

NFPA Semi automatic

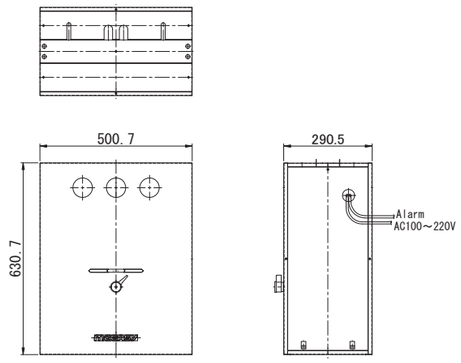

Typical scheme of installation

Installation example(4×4cylinder)

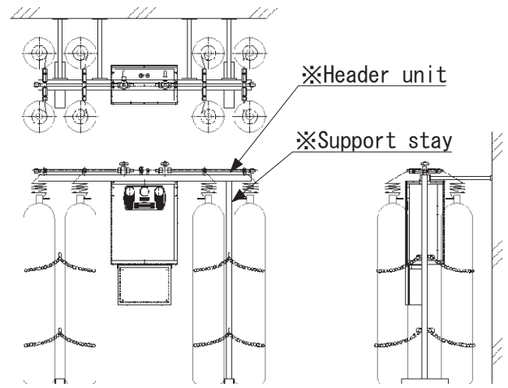

※The Manifolds do not include a Header unit and Support stays

HTM

Model code

MD-M-H-F-□-□-□

S : 574L/min H : 2000L/min	E : ECO S : Standard	O:Oxygen T:Nitrous Oxide N:Nitrogen C:Carbon Dioxide



574L/min

HTM standard type

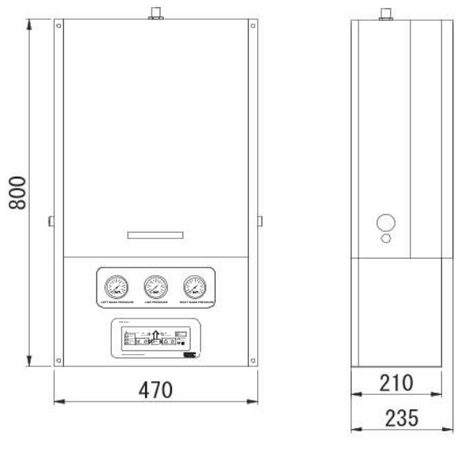

HTM ECO type

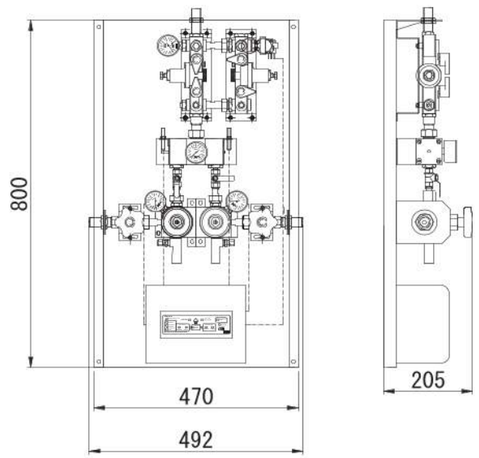

Typical scheme of installation

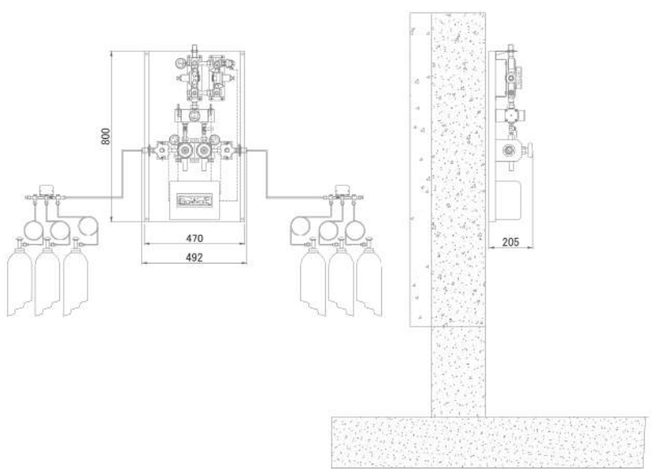

2000L/min

HTM standard type

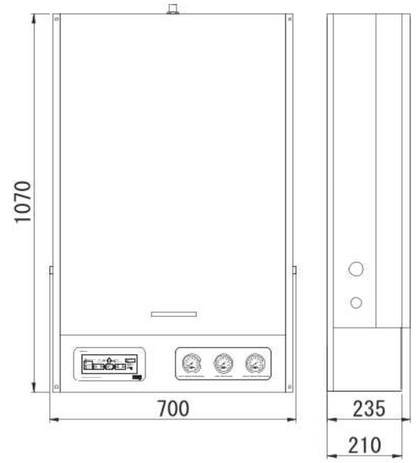

HTM ECO type

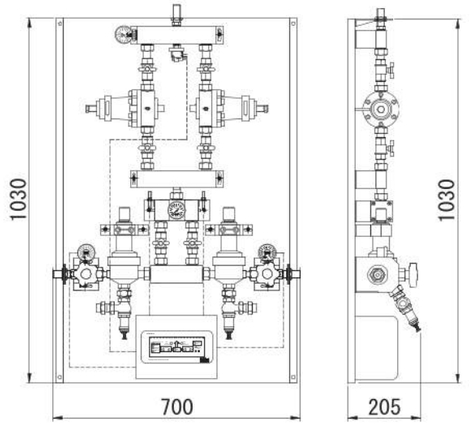

Typical scheme of installation

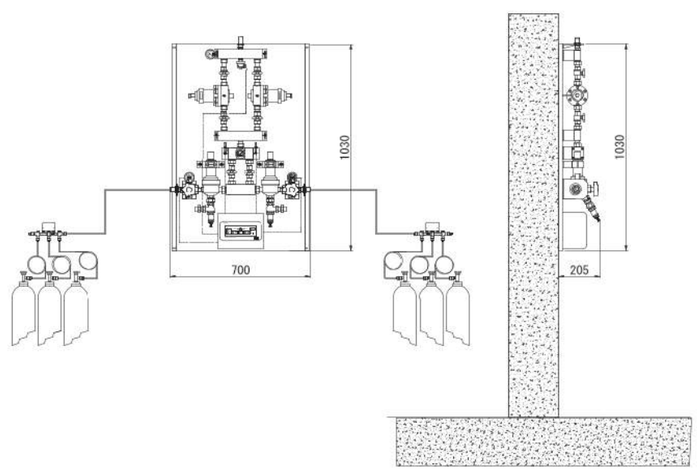

SHUT OFF VALVE



web site

Line UP

NFPA99 type and HTM type
NFPA type: Conforming to NFPA99 (2012)
HTM type: Conforming to HTM 02-01, HTM 2022, BS EN ISO 7396-1, and BS EN ISO 18082 NIST

Safety

Easy access to valve in case of emergency situation.
NFPA type: Access the valves by pulling the ring attached to the panel
HTM type: Specifications available with breakable window or handle for opening

NFPA



Model code

MD-V-N□-□□□□□□□□

Number of valve
1～7

Valve size
1/2"=A
3/4"=B
1"=C
1-1/4"=D
1-1/2"=E
2"=F
2-1/2"=G*
3"=H*

*Only available in single box size

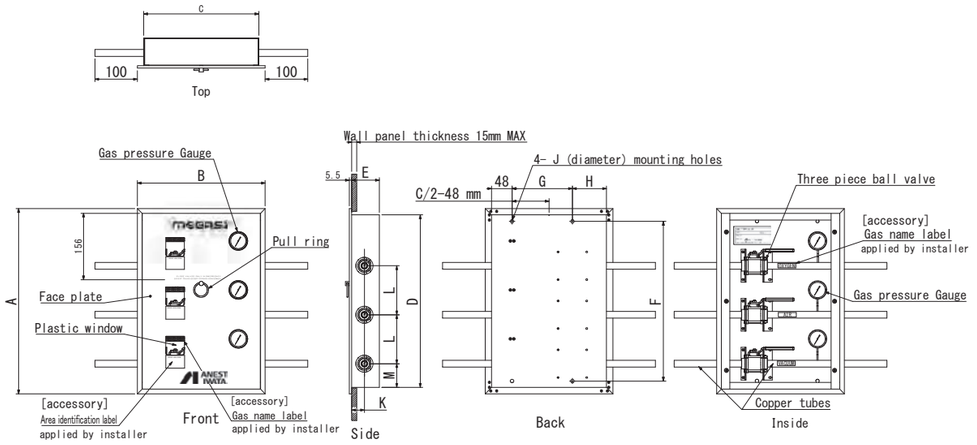

Number of Valves	Size of valves (i.d of Valves ※)	Dimensions											
		A	B	C	D	E	F	G	H	ϕJ	K	L	M
1	1/2" - 1"	205	300	270	175	65	145	142	80	8	32.5	115	59.3
2	1/2" - 1"	320	300	270	290	65	260	142	80	8	32.5	115	59.3
3	1/2" - 1"	435	300	270	405	65	375	142	80	8	32.5	115	59.3
4	1/2" - 1"	550	300	270	520	65	490	142	80	8	32.5	115	59.3
5	1/2" - 1"	665	300	270	635	65	605	142	80	8	32.5	115	59.3
6	1/2" - 1"	780	300	270	750	65	720	142	80	8	32.5	115	59.3
7	1/2" - 1"	895	300	270	865	65	835	142	80	8	32.5	115	59.3

Number of Valves	Size of valves (i.d of Valves ※)	Dimensions											
		A	B	C	D	E	F	G	H	ϕJ	K	L	M
1	1-1/4" - 2"	270	420	390	240	130	200	197	145	10	65	150	100
2	1-1/4" - 2"	420	420	390	390	130	350	197	145	10	65	150	100
3	1-1/4" - 2"	570	420	390	540	130	500	197	145	10	65	150	100
4	1-1/4" - 2"	720	420	390	690	130	650	197	145	10	65	150	100

※ i.d of Valves = o.d of Copper tubes

HTM-Single type-

Model code

MD-V-H-S-□-□□-□

Type	**Pipe size**	**Gas**
E : Emergency access B : Breakable window M : Metal enclosure	22 : 22mm 28 : 28mm 42 : 42mm(Metal enclosure only)	O:Oxygen T:Nitrous Oxide N:Nitrogen C:Carbon Dioxide

Emergency access

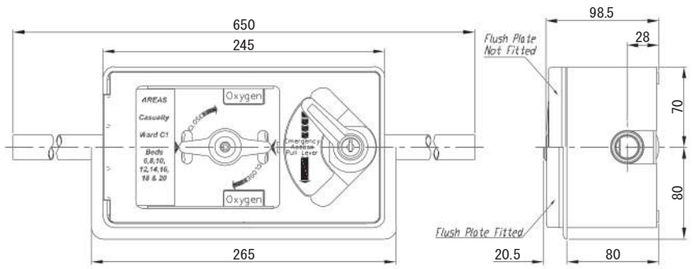

Breakable window

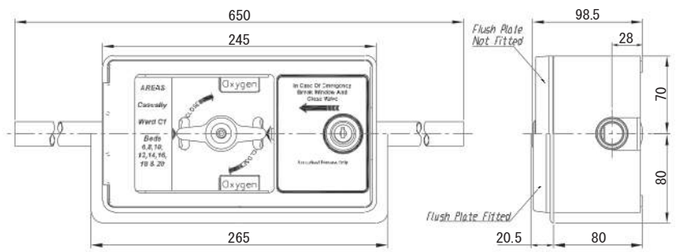

Metal enclosure

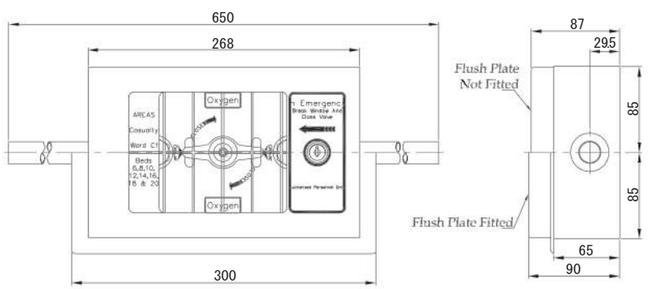

HTM-Multiple type-

Model code

MD-V-H-M-□-□□-□

Optional	**Pipe size**	**Number of valve**
A : With alarm and pressure switches B : No alarm with pressure switches M : No alarm no pressure switches	22 : 22mm 28 : 28mm	1 ~ 6

HTM Multiple type

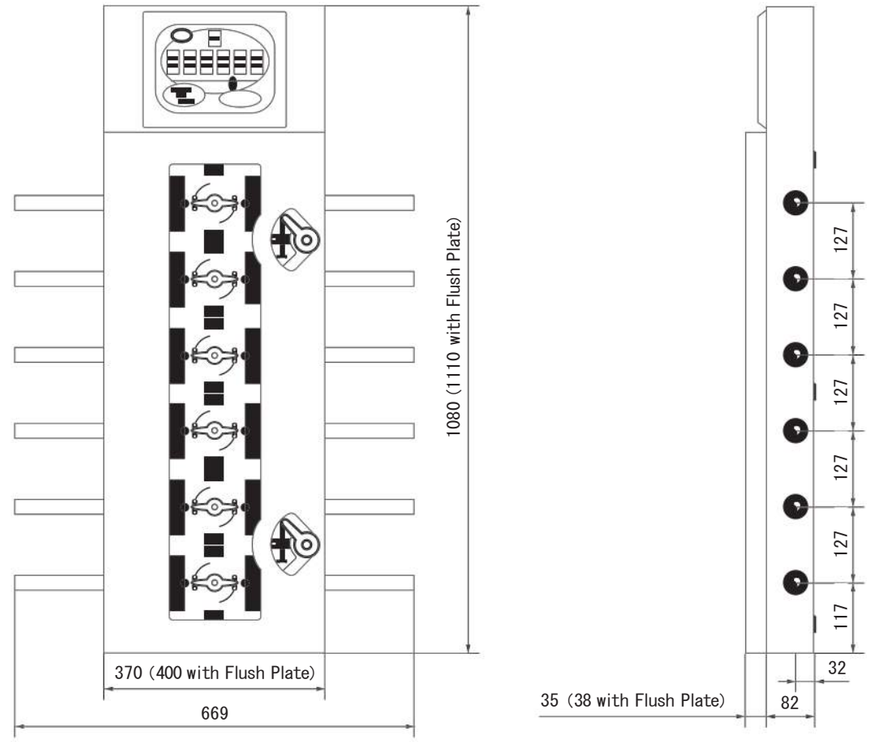

ALARM



web site

Line UP

NFPA type and HTM type
Master/Plant Alarm: Indicate the situation of all of the devices. Can be connected to each area’ s alarm system
Area Alarm: Indicate the situation of each area.

High performance

Display all gas pressure situations in the hospital and communicate with each alarm system using RS485. Top-level quality, and safe/reliable performance.

NFPA



Model code

MD-A-N□□-□□□□□□□

Type	Type	Gas
A:Area M:Master	H:High performance S:Standard	O:Oxygen A:Medical Air V:Vacuum T:Nitrous Oxide N:Ntrogen C:Carbon Dioxide

Area Alarm
High performance

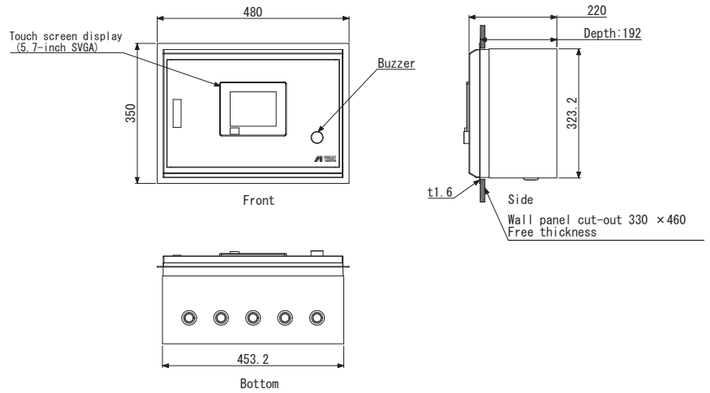

Master Alarm
High performance

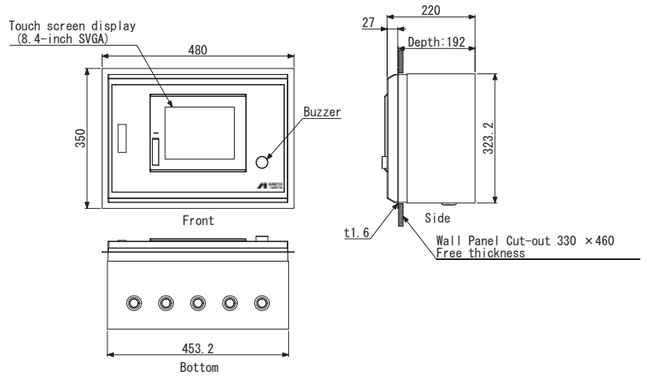

HTM

Model code

MD-A-H-□-□-□

Type	Install method	Number of gas
A:Area P:Plant	F:Flush mount S:Surface mount	1～6

Area Alarm
Flush mount type

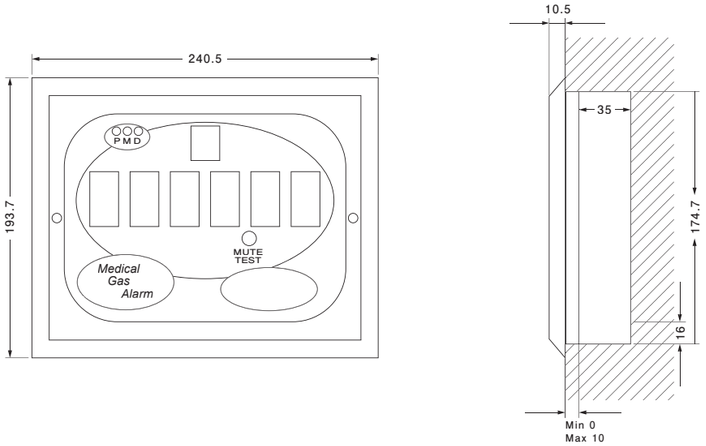

Surface mount type

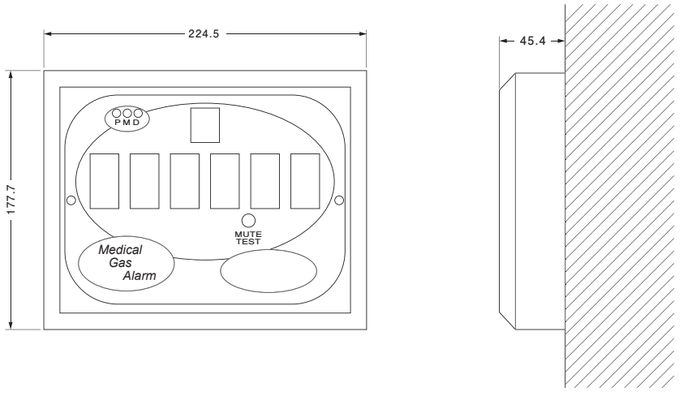

Plant Alarm
Flush mount type

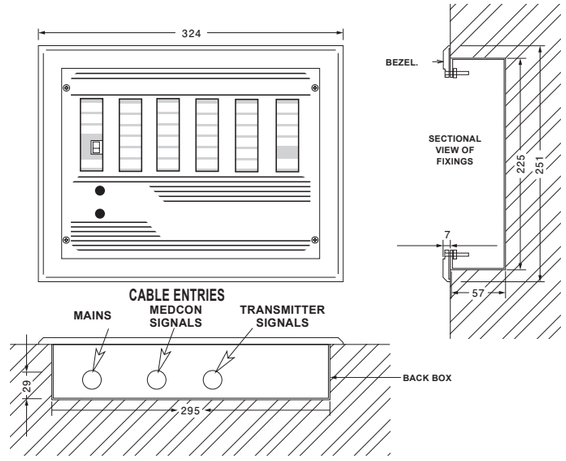

Surface mount type

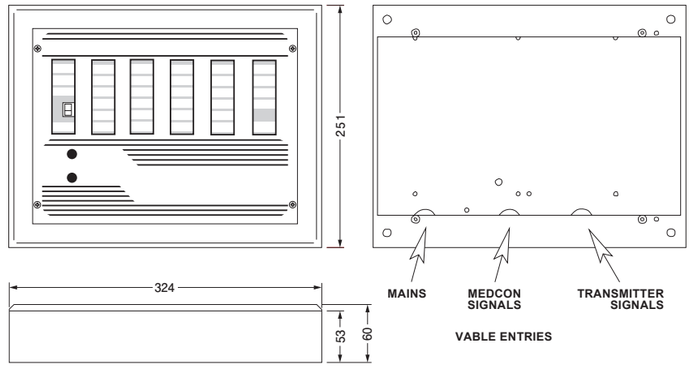

AGSS/WAGD



web site

Line UP

NFPA type and HTM type.
Venturi type: Suction using compressed air
Pump type: Suction using vacuum pumps
Each type has versions with/without box. Select the right products based on your needs.

HTM-Box type-



Model code

MD-G-□-□-□

Certification	Type	Install method
N:NFPA H:HTM	V:Venturi P:Pump	F:Flush mount S:Sarface

Venturi type
Surface type

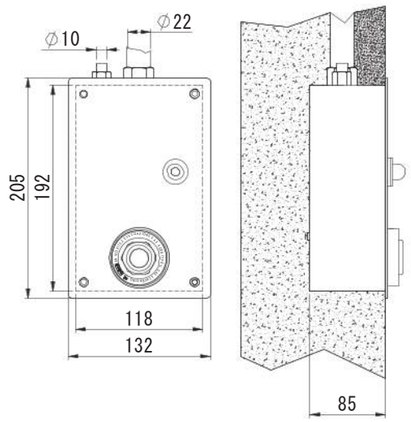

Flush mount type

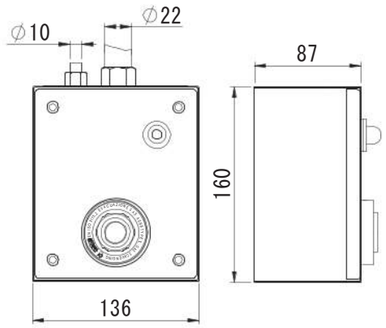

Pump type
Surface type

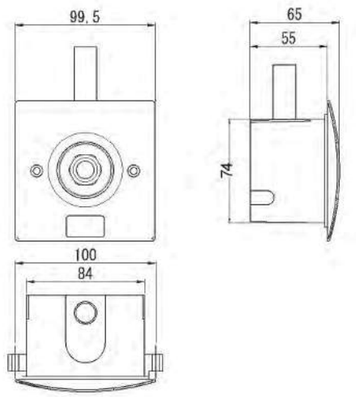

Flush mount type

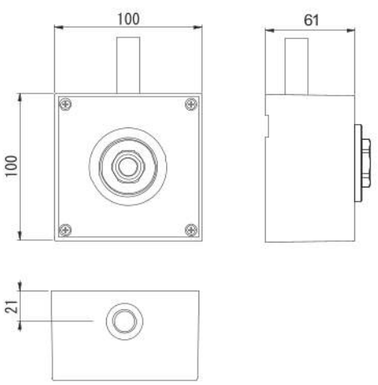

HTM-Outlet type-

Model code

MD-G-□-□-O-□

Certification	Type	Connection
N:NFPA H:HTM	V:Venturi P:Pump	(Venturi type) - (Pump) P:Copper pipe H:Hose

Venturi type

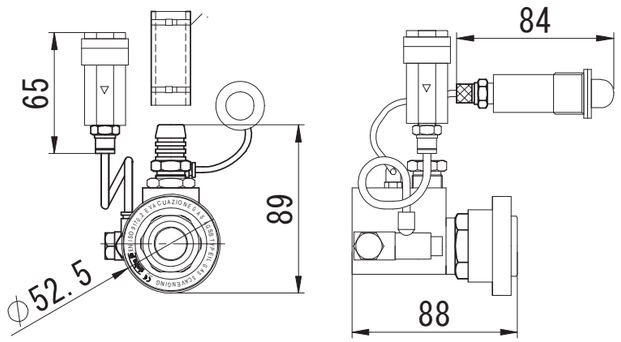

Pump type

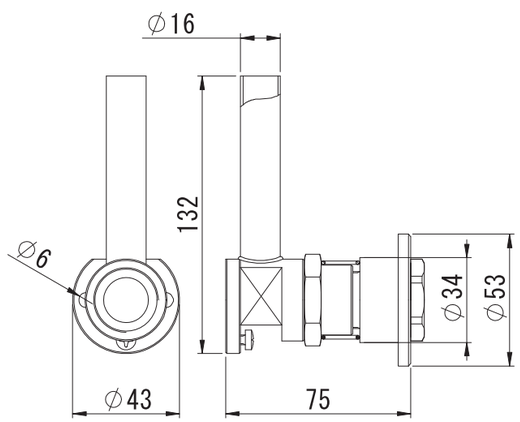

Secondary Equipment

Model code

MD-S-O-□

Probe
B:BS D:DIN J:JIS O:Ohmeda

Oxygen Therapy



Weight	0.35 kg
Max. applicable pressure value	500 kPa
Bottle volume	285 ml
Outlet connection	Hose connector Φ6/9 mm

※If You CAN NOT find your required model from above, Please contact us.

Model code

MD-S-S-□

Probe
B:BS D:DIN J:JIS O:Ohmeda

Suction of Fluids



Weight	0.60 kg
Maximum suction rate	115 L/min. ±5L/min. at -950mbar
Max. applicable pressure value	max -950 mbar - 5min
Bottle volume	300 ml
Outlet connection	Hose connector Φ8.0/9.2 mm

※If You CAN NOT find your required model from above, Please contact us.

ANEST IWATA Global Network







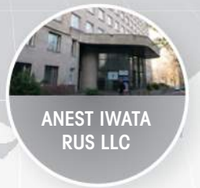





MEGASY

medical gas systems

ANEST IWATA Corporation

3176 Shinyoshida-cho, Kohoku-ku,
Yokohama, 223-8501 Japan

Telephone +81-(0)45-591-1122
Facsimile +81-(0)45-593-0524

Organismo Notificato n. 0476
Notified Body nr. 0476

ISO 13485
JQA-MD0040

JAB
CM009