We are closer than you think!

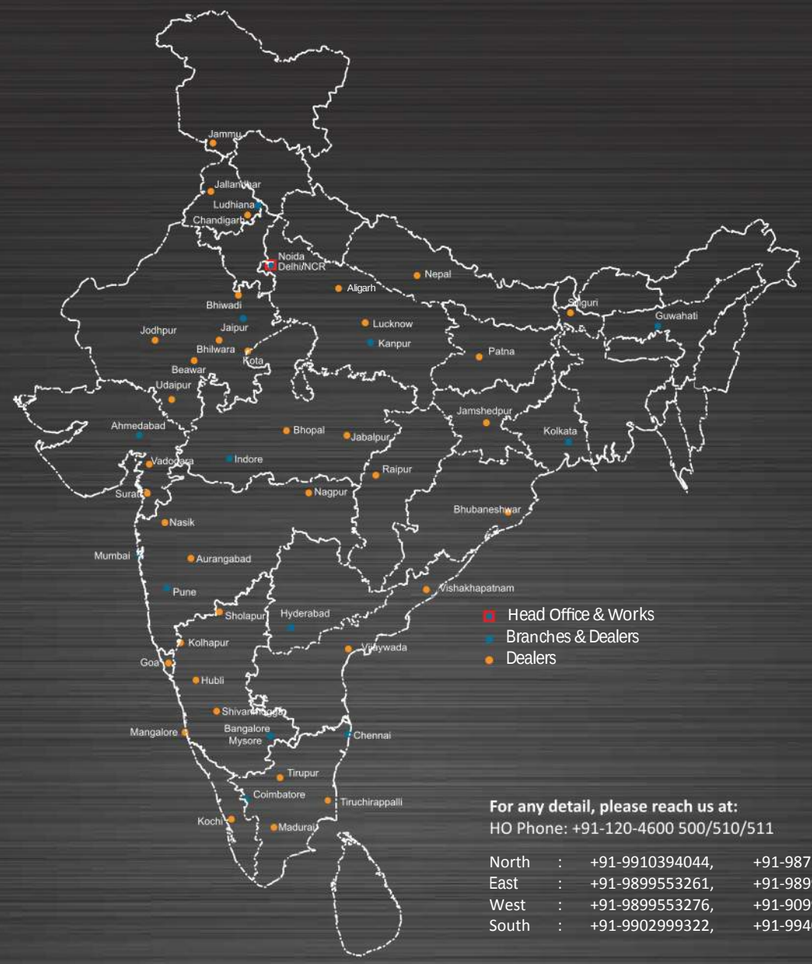

For any detail, please reach us at:
HO Phone: +91-120-4600 500/510/511

North	:	+91-9910394044,	+91-9871362399
East	:	+91-9899553261,	+91-9899553270
West	:	+91-9899553276,	+91-9099472222
South	:	+91-9902999322,	+91-9940654560

⚠ Precaution on usage

- This vacuum pump is suitable for clean processes only.
- Do not use explosive, flammable, toxic or corrosive substances or substances which contains chemicals, solvents or particals.
- ANEST IWATA will not perform maintenance work on pumps which have used hazardous substances.
- The thermal protector installed on a single phase motor will automatically rest after the motor has cooled down. Be sure to install overcurrent protective device.
- Do not alter or disassemble the product.
- Be sure to read instruction manual and understand it fully before use.
- The warranty period is based on instruction manual. Maintenance interval and the warranty period are different.
- Classification which is based on Foreign Exchange and Foreign Trade Control Act is necessary for export. Please contact us.

⚠ Caution for installation

- Install in an area which is not exposed to explosives, flammable gas, or other related things.
- Pumps do not have overcurrent protective device for burnout. Install overcurrent protective device properly for safety.
- Electric source cable is not included in the pump. Use electric source cable which is instructed by instruction manual.
- Periodic maintenance is required. Please install it in a location that can be maintained and ventilated.
- The specifications in the catalogue is measured by our cumpony standards. There is no guarantee on your conditions and applications.
- When you start and stop the pump repeatedly, it may shorten life of the product. Please contact us if you like detailed information.

- Models,specifications and photos are subject to change without notice.

More than 75 dealers across India

ANEST IWATA MOTHERSON

ANEST IWATA MOTHERSON PVT. LTD

B-123 & 124, Sector-63, Noida-201301, Distt. Gautam Budh Nagar, U.P., India
Phone: +91 120 4600 500/510/511
Email: anestiwata@aim.motherson.com

www.aimcompressors.com

VACUUM PUMPS & EQUIPMENT

ANEST IWATA

GLOBAL ONE



The Air of Trust

Proud to be part of samvardhana **motherson**

HISTORY OF VACUUM EQUIPMENT SINCE 1993

ANEST IWATA persists in excellence in technology
ANEST IWATA has been the DRY Scroll technology leader since 1993.

ANEST IWATA realizes the first-of the world technologies to its products as a pioneer in the world's industry.
The world's first OIL-FREE SCROLL VACUUM PUMP was launched in 1993. It has been expanded to present line-ups.

1993 [ISP-500 released]
The World's first Oil-free Scroll Vacuum Pump was launched.

1997 [DVSL-500 released]
A robust single-wrap structure direct-drive scroll vacuum pumps was Introduced.

2003 [VTE-050 released]
High-vacuum pumping portable units were Introduced.

2007 [ISP-1000 released]
Largest pumping displacement model in ISP series was launched.

2011 [DVSL-501C-HC released]
2011 Introduced hard coated unit to DVSL series



2013 [ISP-500C-TVT released]
Leak-tight version was introduced in ISP series.



2016 [DVSL-500E released]
High-efficiency three-phase motors were employed.



ANEST IWATA's vacuum equipment leads the world industries with its state-of-the-art technology.



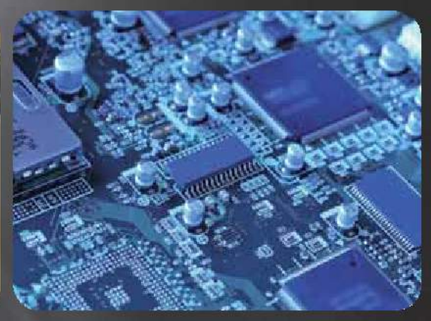



■**ANEST IWATA's excellence of technology realizes the world's first OIL-FREE SCROLL VACUUM PUMP.**
Its concept is to operate with no liquid lubricant inside.

■**ANEST IWATA products receive high commendation from the globalindustry.**
e.g.
- ·Photon Light Sources and Particle Accelerators.
- ·Outer Space Simulators.
- ·Advanced Medical Technologies/Care Units.
- ·Industries which sustain humen's life such as Automotive area, Civil aerospace businesses, Electronics/Electrical products, Pharmaceutical products, food, Cosmetics.

VACUUM EQUIPMENT LINE UP

ANEST IWATA has wide range line up of Vacuum pump.

The performance of a vacuum pump is determined by its ultimate pressure and pumping speed. ANEST IWATA provides a wide variety of vacuum pumps, each with a different ultimate pressure and a different pumping speed. Customers can select the products that suit their budget and needs.

Features of ANEST IWATA Vacuum pump

Oil-Free — Conventional oil-sealed rotary pumps uses oil for sealing, which causes oil mists and back-diffusion of oil, resulting in contamination of room air or oil stains on the floor. ANEST IWATA was the first to develop an oil-free scroll pump in the world. The pump, which solves oil contamination and maintenance problems, is used by many customers in a wide range of applications from cutting-edge industries in the field of physical and chemical science to general-purpose uses.

Scroll — The scroll mechanism is adopted whereby the processes of suction, compression and exhaust proceed continuously with little change in torque, resulting in low vibration and low noise. The suction chamber and exhaust chamber are not adjacent to each other, making the pump less prone to leaks and highly efficient.

Air cooling — The use of an air cooling system, instead of a water cooling system, eliminates the need for the burdensome job of maintaining cooling water and allowing the pump to be installed in places where it was formerly difficult to install. Another feature of ANEST IWATA's vacuum pump is that they are light and compact and designed to minimize the installation space.

Ultimate pressure (Pa)

1

Medium-Vacuum

100

Low-Vacuum

Atmospheric pressure

ISP series (Scroll Meister) Ultimate pressure 1~20Pa



ISP-50 ▸▸P.05



ISP-90 ▸▸P.06



ISP-250C ▸▸P.07



ISP-500C ▸▸P.08



ISP-1000E ▸▸P.09

Scroll Meister SERIES

The ISP Series consists of some models supporting medium- and high-vacuum pressures of 1 to 20 Pa and pumping speeds of 50 to 1000 L/min. The pumps are designed with focus on performance, boast an excellent track record in both cutting-edge industries and general-purpose applications.

How to select for ISP series

ISP-○○-●●

- Design Pumping Speed of vacuum pump
- T:Three phase motor S:Single phase motor
- V:Vertical inlet H:Horizontal inlet

※Selectable items are different from models.

DVSL series (S Dry) Ultimate pressure 30~100Pa



DVSL-100C ▸▸P.11



DVSL-500E ▸▸P.12

S Dry SERIES

DVSL pumps are ideal for low-mid vacuum applications. There are 6 models with pumping speeds from 100L/min to 1,000L/min. All models include our air flush port for flashing moisture from inside the pump. Our HC version provides higher durability for demanding applications. We have 2 models for pumping speeds of 100L/min and 500L/min.
Applications : Chucking, Dearing/Degassing, Vacuum foaming, Vacuum drying...

View of the icon

1φ	3φ			CE	CSA	cTUV	RoHS
Single phase motor	Three phase motor	Vertical inlet	Horizontal inlet	CE conformity	CSA conformity	cTUV conformity	RoHS conformity

※Ultimate pressure : Absolute pressure uses in this catalog.
※Pumping speed: This indicates how many liters can be exhausted per minute. The unit is L/min.

Principle of compression

As the orbiting scroll orbits as shown in the illustration from the No.1 position to the No.4 position, crescent shaped gas pockets are gradually reduced.
At the last stage compressed gas is exhausted through the center port.

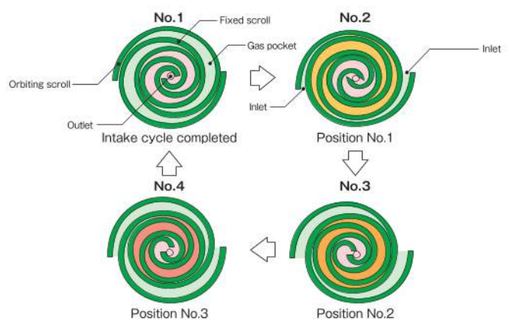

100 500 1000 3000 Pumping speed (L/min)

Best selling mid vaccum pumps

ISP/SDM series (Scroll Meister)

ISP-50

1φ CE CSA RoHS

ISP-50-5V1 (100V model) / **ISP-50-5V2** (200V model)



Specifications

Model		ISP-50
Displacement	L/min (50/60Hz)	50/60
Ultimate pressure	Pa	≦ 20/ ≦ 15 (50/60Hz)
Motor output	kW	0.1
Voltage	V Single phase	100,115/200,230
Noise level	dB (A)	48 (At air flush 57)
Leak tightness	Pa·m³/s	≦ 1.0 × 10⁻⁷
Ambient temperature	℃	5 ~ 40(Indoor)
Weight	kg	12
Water vapor capacity	g/day	3 (At air flush)
Air flush	L/min	4
Dimensions	mm	L317 × W155 × H227
Inlet connection		NW25
Outlet connection		NW16
Cooling Method		Air-cooled
Standard Accessories		Air Flush Attachment, Hour Meter, thermal protector

●Ultimate pressure is measured as total pressure.
●Noise level is measured at ultimate pressure in an anechoic room.

Dimensions

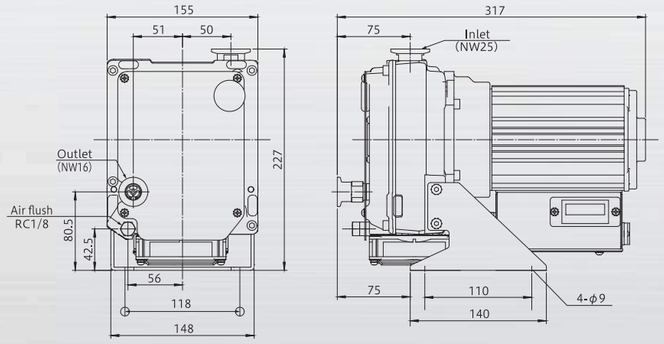

Pumping speed

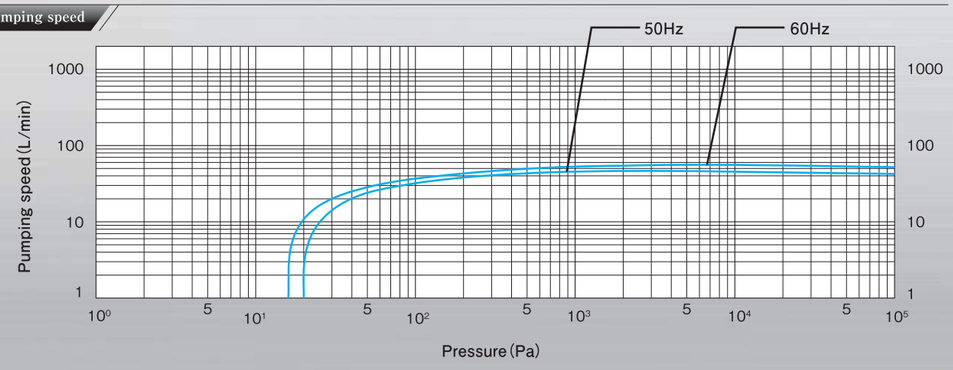

ISP-90

1φ CE CSA RoHS



Specifications

Model		ISP-90
Displacement	L/min (50/60Hz)	90/108
Ultimate pressure	Pa	≦ 5
Motor output	kW	0.15
Voltage	V Single phase	100,115,200,230
Noise level	dB (A)	52 (At air flush 57)
Leak tightness	Pa·m³/s	≦ 1.0 × 10⁻⁵
Ambient temperature	℃	5 ~ 40(Indoor)
Weight	kg	14
Water vapor capacity	g/day	5 (At air flush)
Air flush	L/min	9
Dimensions	mm	L308 × W214 × H225
Inlet connection		NW25
Outlet connection		NW16
Cooling Method		Air-cooled
Standard Accessories		Air Flush Attachment, Hour Meter, thermal protector

●Ultimate pressure is measured as total pressure.
●Noise level is measured at ultimate pressure in an anechoic room.

Dimensions

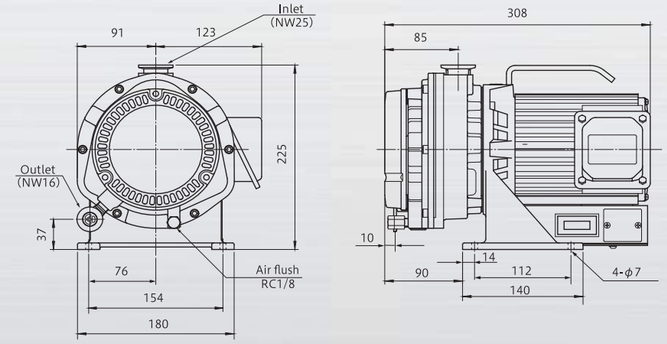

Pumping speed

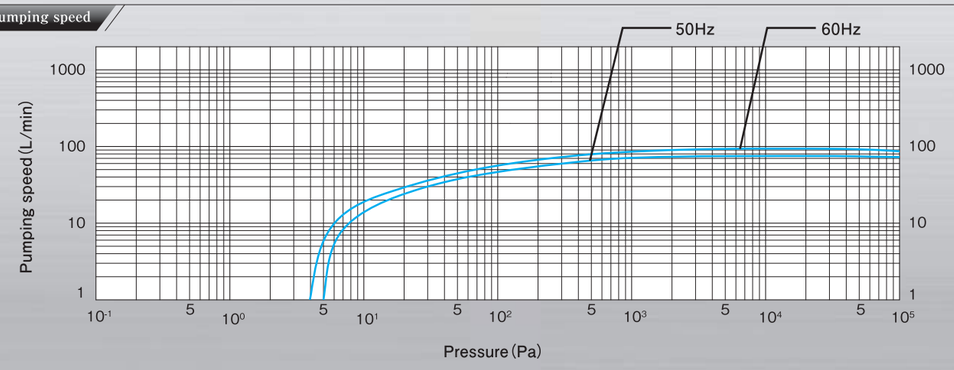

ISP-250C

1φ 3φ CE CSA RoHS

ISP-250C-SV / ISP-250C-TV



Specifications

Model			ISP-250C
Displacement	L/min (50/60Hz)		250/300
Ultimate pressure	Pa		≦ 1.6
Motor output	kW		0.4
Voltage	V	Single phase	100,115,200,230
		Three phase	200,208,230,380,400,415,460
Noise level	dB (A)		58 (At air flush 66)
Leak tightness	Pa·m³/s		≦ 1.0 × 10⁻⁵
Ambient temperature	℃		5 ~ 40(Indoor)
Weight	kg	Single phase	25
		Three phase	23
Water vapor capacity	g/day		25 (At air flush)
Air flush	L/min		10
Dimensions	mm	Single phase	L400 × W252 × H336
		Three phase	L370 × W252 × H336
Inlet connection			NW25
Outlet connection			NW16
Cooling Method			Air-cooled
Standard Accessories			Air Flush Attachment, Hour Meter, Only single phase motor with thermal protector

- Ultimate pressure is measured as total pressure.
- Noise level is measured at ultimate pressure in an anechoic room.

Dimensions

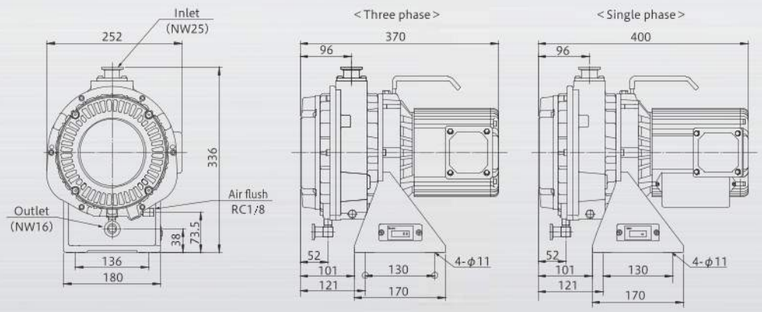

Pumping speed

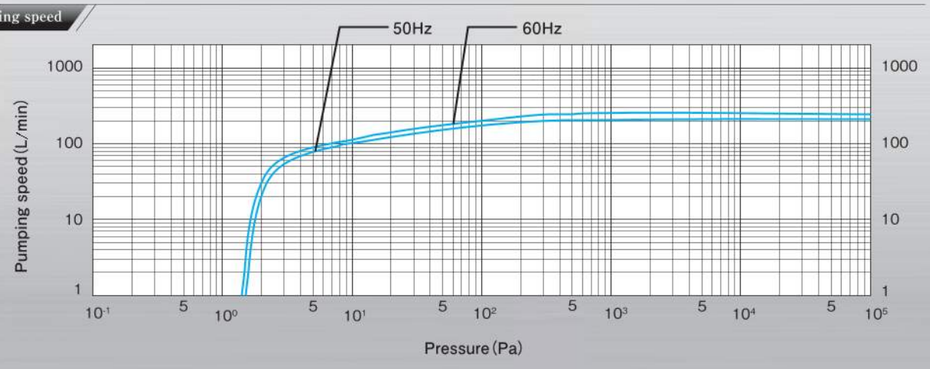

ISP-500C

1φ 3φ CE CSA RoHS

ISP-500C-TH / ISP-500C-TV
ISP-500C-SH / ISP-500C-SV

(Leak tight model)
ISP-500C-THT / ISP-500C-TVT
ISP-500C-SHT / ISP-500C-SVT



Specifications

Model			ISP-500C	ISP-500C [Leak tight model]
Displacement	L/min (50/60Hz)		500/600	
Ultimate pressure	Pa		≦ 1	
Motor output	kW		0.6	
Voltage	V	Single phase	100,115,200,230	
		Three phase	200,208,230,380,400,415,460	
Noise level	dB (A)		62 (At air flush 70)	
Leak tightness	Pa·m³/s		≦ 1.0x10⁻⁵	≦ 1.0x10⁻⁷
Ambient temperature	℃		5 ~ 40(Indoor)	
Weight	kg	Single phase	44	
		Three phase	38	
Water vapor capacity	g/day		25 (At air flush)	
Air flush	L/min		10	
Dimensions	mm	Single phase	L443 × W328 × H372 (L443 × W304 × H397)	
		Three phase	L372 × W328 × H372 (L372 × W304 × H397)	
Inlet connection			NW40	
Outlet connection			NW25	
Cooling Method			Air-cooled	
Standard Accessories			Air Flush Attachment, Hour Meter, Only single phase motor with thermal protector	

- Ultimate pressure is measured as total pressure.
- Noise level is measured at ultimate pressure in an anechoic room.
- Dimensions in parentheses are dimensions when inlet flange is located upward.

Dimensions

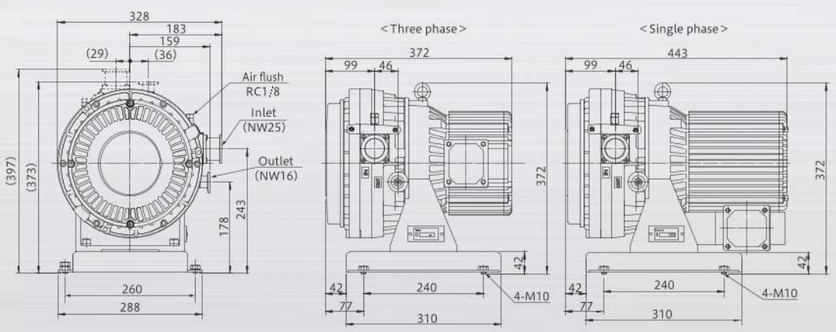

Pumping speed

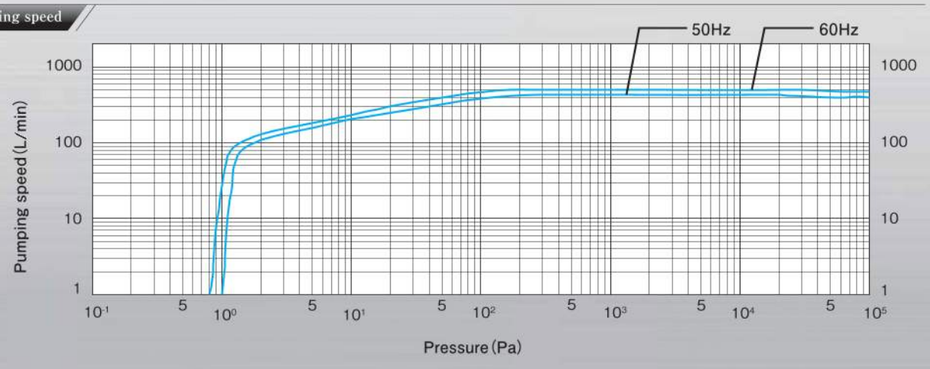

ISP-1000E

3φ

ISP-1000E-TH ／ ISP-1000E-TV



Specifications

Model		ISP-1000E
Displacement	L/min (50/60Hz)	1000/1200
Ultimate pressure	Pa	≦ 1
Motor output	kW	1.4
Voltage	V Three phase	200,220,230,380,400,415,460
Noise level	dB (A)	67 (At air flush 74)
Leak tightness	Pa・m³/s	≦ 1.0 × 10⁻⁵
Ambient temperature	℃	10 ～ 40(Indoor)
Weight	kg	68
Water vapor capacity	g/day	25 (At air flush)
Air flush	L/min	10
Dimensions	mm	L549 × W390 × H421 (L549 × W359 × H451)
Inlet connection		NW40
Outlet connection		NW40
Cooling Method		Air-cooled
Standard Accessories		Air Flush Attachment, Hour Meter

- Ultimate pressure is measured as total pressure.
- Noise level is measured at ultimate pressure in an anechoic room.
- Dimensions in parentheses are dimensions when inlet flange is located upward.

Dimensions

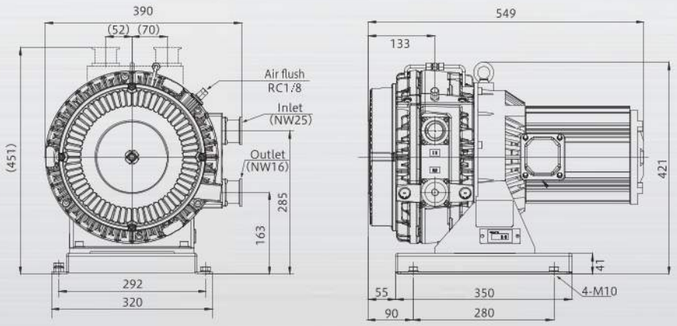

Pumping speed

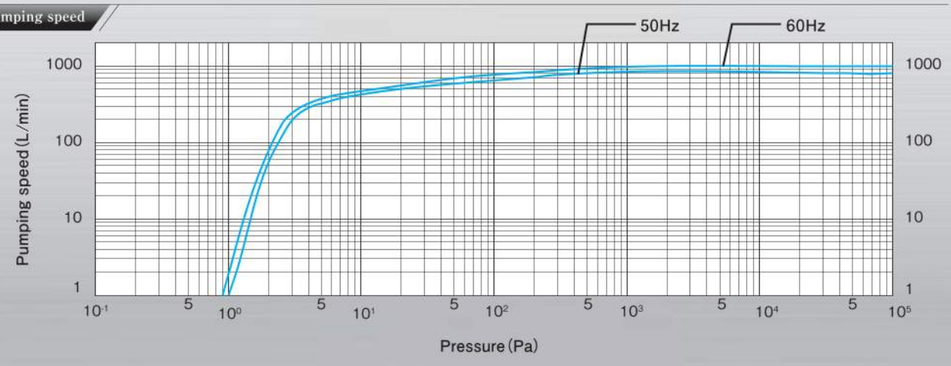

Handles water carryover well, ideal for industrial application

DVSL series (S Dry)

DVSL-100C

1φ

DVSL-100C



Specifications

Model		DVSL-100C
Back-up material		Fluorine rubber
Displacement	L/min (50/60Hz)	100/120
Ultimate pressure	Pa	≦ 50
Motor output	kW (50/60Hz)	0.3/0.3
Voltage	V Single phase	100,115,200,230
Noise level	dB (A)	62 (At air flush 65)
Ambient temperature	℃	5 ～ 40(Indoor)
Weight	kg	15
Water vapor capacity	g/day	100 (At air flush)
Air flush	L/min	5
Dimensions	mm	L358 × W210 × H215
Inlet connection		NW25 (with Rc 3/8)
Outlet connection		NW16(with Exhaust valve)
Cooling Method		Air-cooled
Standard Accessories		Air Flush Attachment, thermal protector
Optional		—

- Ultimate pressure is measured as total pressure.
- Noise level is measured at ultimate pressure in an anechoic room.
- Without hourmeter.

Dimensions

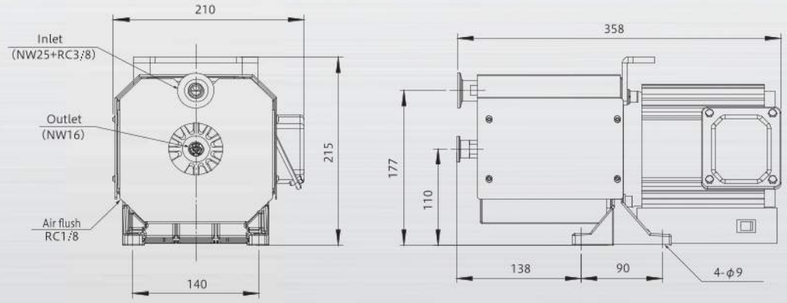

Pumping speed

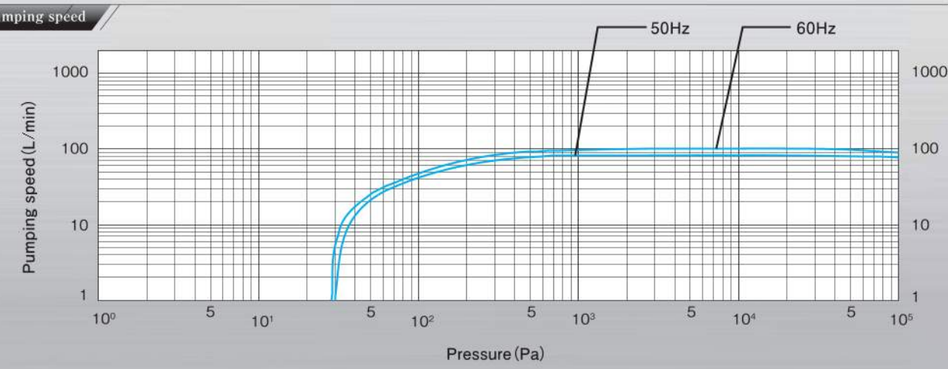

DVSL-500E

3φ

DVSL-500E / DVSL-501E



Specifications

Model		DVSL-500E	DVSL-501E
Back-up material		Silicon rubber	Fluorine rubber
Displacement	L/min (50/60Hz)	433/516	
Ultimate pressure	Pa	≦ 30	≦ 100
Motor output	kW (50/60Hz)	0.9/1.1	
Voltage	V Three phase	200,220,230,380,400,415,460	
Noise level	dB (A)	64 (At air flush 69)	
Ambient temperature	℃	5 ～ 40(Indoor)	
Weight	kg	34	
Water vapor capacity	g/day	250 (At air flush)	
Air flush	L/min	10	
Dimensions	mm	L521 × W317 × H280	
Inlet connection		NW25 (with Rc 1/2)	
Outlet connection		NW25(with Exhaust valve)	
Cooling Method		Air-cooled	
Standard Accessories		Air Flush Attachment, Hour meter,	
Optional		Moisture Separator	

●Ultimate pressure is measured as total pressure.
●Noise level is measured at ultimate pressure in an anechoic room.

Dimensions

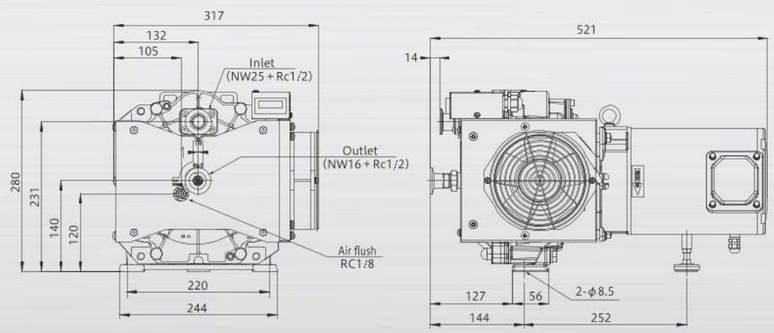

Pumping speed

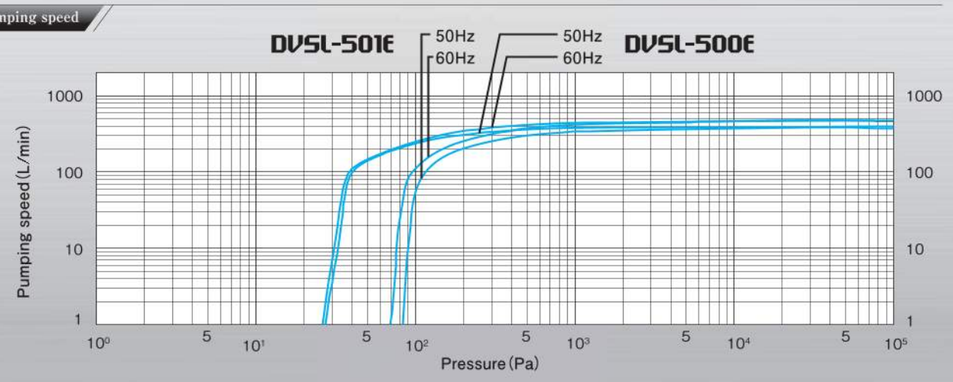

Ideal pumps for steamy allications

DVSL series (Hard coat specification)

DVSL-100C-HC

1φ



Product dimensions and pumping speed are the same as the DVSL-100C.

Specifications

Model		DVSL-100C-HC
Back-up material		Fluorine rubber
Displacement	L/min (50/60Hz)	100/120
Ultimate pressure	Pa	≦ 70
Motor output	kW (50/60Hz)	0.3/0.3
Voltage	V Single phase	100,115,200,230
Noise level	dB (A)	62 (At air flush 65)
Ambient temperature	℃	5 ～ 40(Indoor)
Weight	kg	15
Water vapor capacity	g/day	100 (At air flush)
Air flush	L/min	5
Dimensions	mm	L358 × W210 × H215
Inlet connection		NW25 (with Rc 3/8)
Outlet connection		NW16(with Exhaust valve)
Cooling Method		Air-cooled
Standard Accessories		Air Flush Attachment, thermal protector
Optional		—

●Ultimate pressure is measured as total pressure.
●Noise level is measured at ultimate pressure in an anechoic room.

DVSL-501E-HC

3φ

cTUV RoHS



Product dimensions and pumping speed are the same as the DVSL-500E.

Model		DVSL-501E-HC
Back-up material		Fluorine rubber
Displacement	L/min (50/60Hz)	433/516
Ultimate pressure	Pa	≦ 100
Motor output	kW (50/60Hz)	0.9/1.1
Voltage	V Three phase	200,220,230,380,400,415,460
Noise level	dB (A)	64 (At air flush 69)
Ambient temperature	℃	5 ～ 40(Indoor)
Weight	kg	34
Water vapor capacity	g/day	250 (At air flush)
Air flush	L/min	10
Dimensions	mm	L521 × W317 × H280
Inlet connection		NW25 (with Rc 1/2)
Outlet connection		NW25(with Exhaust valve)
Cooling Method		Air-cooled
Standard Accessories		Air Flush Attachment, Hour meter,
Optional		Moisture Separator

●Ultimate pressure is measured as total pressure.
●Noise level is measured at ultimate pressure in an anechoic room.

Features

- The life time of scroll surface becomes 3 times longer caused by special coating was applied.※1
- Chemical application is acceptable. Easy to use like DVSL series.※2
- Various application with better ultimate pressure.
  Freeze drying system, evaporation, degassing, ultra pure water systems etc. which evacuate a lot of water vapor.

※1 It is just reference compared with our product. This value changes depends on customer application.
※2 Please contact us.

A variety of options are available for vacuum pumps.

Sound Enclosure for ISP-250

It reduces running noise by 5dB. Quieter and ideal ambient for laboratory experiments.

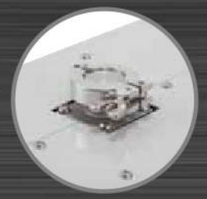
image of inlet port with clamp



OCX-55549



Built image of sound enclosure

- It weighs only 8 kg. Change to lbs.
- Easy to install.
- The enclosure has a small opening to read hour meter.
- It can attach a clamp to inlet port at after the inst l l ation.

Noise level



⚠ Caution

- This enclosure fits ISP-250C only.
- Place enclosure with the pump from above. Remove handle at the top of motor before install the enclosure. Turn and remove a hex-head bolt to remove handle from the pump.
- Please install on a strong and level floor.
- Please install in a well-ventilated place.

Dimensions



Chamber

VCH-20 20L (Connection NW25)
VCH-35 35L (Connection NW40)

Used for multiple purposes such as gas pulsation prevention or use as an auxiliary tank



Carrier

OCX-899

For moving and storing a vacuum pump

■Applicable models

ISP-250B 250C
ISP-500B 500C



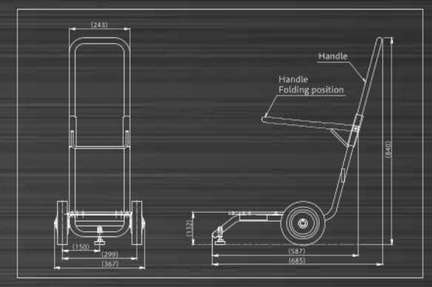

Moisture separator / Silencer

Moisture separator /
Silencer For DVSL・GVS series (98882031)

Air hose (98804230)
Hose clamp (96993705)



Air hose and hose clamp are sold separatory.

Inlet filter

Vacuum inlet filter 15A (98891330)
Inlet connection Rp3/8

Vacuum inlet filter 25A (98891340)
Inlet connection Rp1



APPLICATION

Vacuum equipment of Anest Iwata are utilized in various applications.

Vacuum Equipment Applications

01 Pick and Place [DVSL]

Conveying workpiece and utilizing a pressure difference with suction pad.

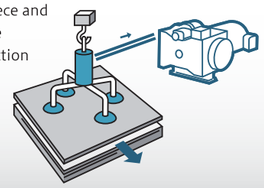

02 Vacuum Chuck [DVSL]

Chucking a workpiece by pressure difference. Suitable for distorted surface, soft, thin film and small objects.

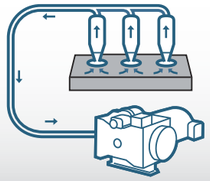

03 Medical [ISP/DVSL]

Used for various applications. Cancer therapy system, Sterilization and aspirator in the hospital etc.

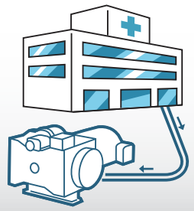

04 Vacuum drying [DVSL]

Removing unnecessary components form the work (workpiece?) using vacuum pressure.
It is used for delicate material against heating and complex shape.
For example ... Removing washing water from mechanical parts, Removing absorbed water molecular from resin pellets, and centrifugal system for chemicals etc.

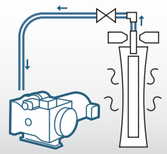

05 Vacuum-freeze drying [DVSL]

Sublimating frozen work under vacuum pressure.
For example ... instant coffee, dry food, etc.

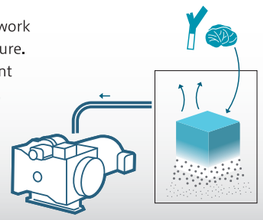

06 Vacuum heat insulation [DVSL]

Vacuum is suitable for heat-insulation as it doesn't cause heat conduction.
For example ... Vacuum heat insulation sheet, thermos etc.

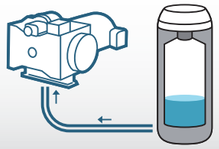

07 Vacuum impregnation [DVSL]

Penetrating the seasoning to groceries using a vacuum pressure.
The mechanical components are utilized to infiltrate the adhesive.



08 Vacuum Forming [DVSL]

Using a vacuum pressure to the molding resin materials.

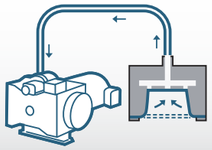

09 Degassing [DVSL]

Contained gases are sucked from the material using a vacuum pressure.

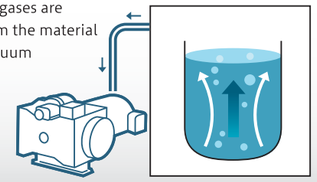

10 Vacuum packaging [DVSL]

Sucking the air from the sealed bag to prevent deterioration of the food and workpiece.

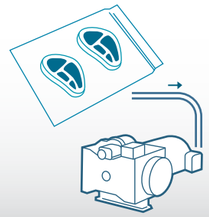

11 Gas recovery devices [ISP/DVSL]

Make it easier to fill the gas to the container which is under vacuum pressure.
It is also used to recover the gases, which are the rare gas and the effective gas to the environment (ISP series).

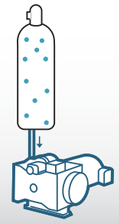

12 Exhaust gas inspection [ISP]

It is used for the inspection of particulate contained in the exhaust gas of automobiles.

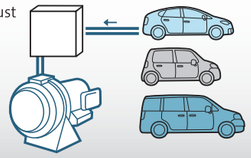

13 Leak detectors [ISP/DVSL]

Checking the leakage of containers by pressure change during the certain time under the vacuum pressure.
Leak tight pump is needed for Helium leak tester to prevent the influence of background (ISP series).

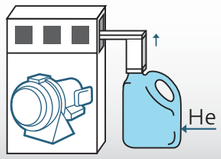

14 Electron microscope [ISP]

The vacuum pressure is needed in the chamber when the sample is scanned by shot electron beam.

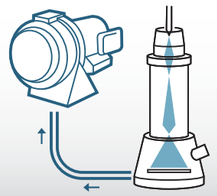

15 Vacuum heat treatment [ISP]

Preventing the oxidation and removing absorbed gas for heat treatment under the vacuum pressure.

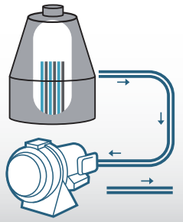

16 Sputtering [ISP]

Deposit metal on a surface by using fast ions to eject particles out of it from a target.

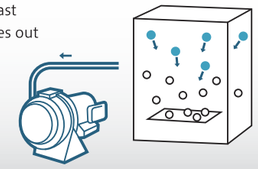

17 Evapolation deposition [ISP]

Deposit metal on a surface by heating a target in vacuum chamber.

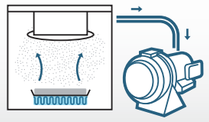

18 Accelerator·Synchrotron [ISP]

By creating clean vacuum condition, we are supporting world's cutting-edge technologies such as accelerator and particle physics.



Service network

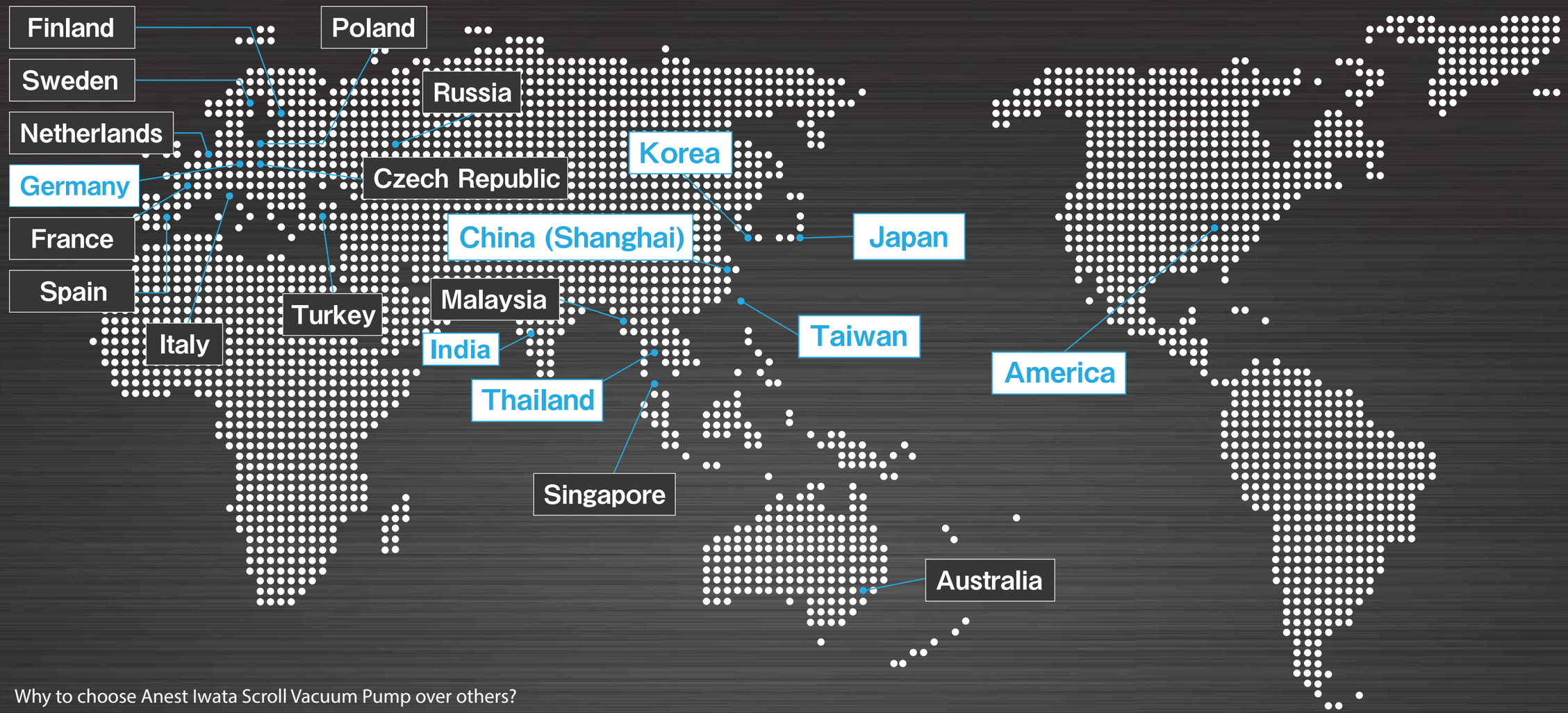

Why to choose Anest Iwata Scroll Vacuum Pump over others?

We have pioneered this technology in the year 1991 and launched world's first oil free scroll vacuum pump in the year 1993

We are the only manufacturer having a strong setup for aftersales support with availability of spares, manpower competence and adequate tool kits in India

Our Scroll machines are Class '0' certified from TUV which signifies the assuredness of clean & non-contaminated vacuum

We are the preferred oil free scroll vacuum pump supplier to many leading OEMs and analytical equipment suppliers around the globe

We are the only manufacturer of scroll vacuum pump with serviceable air end and having global service network

We are the world leader for oil free scroll vacuum pump technology with possession of many patents

WE REDEFINED THE VACUUM